National Broadband Network

Product Technical Specification

NBN Co Ethernet Bitstream Service

This document forms part of NBN Co's Wholesale Broadband Agreement which is a Standard Form of Access Agreement for the purposes of Part XIC of the Competition and Consumer Act 2010.

NBNCo
Bringing broadband to life

NBN Co Limited

Product Technical Specification - NBN Co Ethernet Bitstream Service

This document applies to a Wholesale Broadband Agreement if the Head Terms are version 2.0 and 2.1

2.0 2.1

NBN Co Networks: Fibre, Wireless

FIBRE WIRELESS

Version	Description	Effective Date
2.0	Issued on 9 December 2013	Execution Date
2.1	Medium Business Phase 1(b) notified on 13 March 2014	30 April 2014
2.2	Enablement of outdoor power supply units and changes to the power requirements notified on 7 April 2014	23 May 2014
2.3	Higher traffic class 1 & 4 CVC speed tiers notified on 29 August 2014	15 October 2014
2.4	Feature enhancements for NEBS supplied by means of the NBN Co Fibre Network, and Default Mapped for traffic classes 1 & 2 notified on 15 May 2015	30 June 2015

Copyright

This document is subject to copyright and must not be used except as permitted below or under the Copyright Act 1968 (Cth). You must not reproduce or publish this document in whole or in part for commercial gain without the prior written consent of NBN Co. You may reproduce and publish this document in whole or in part for educational or non-commercial purposes as approved by NBN Co in writing.

Copyright © 2015 NBN Co Limited. All rights reserved. Not for general distribution.

Disclaimer

This document is provided for information purposes only. The recipient must not use this document other than with the consent of NBN Co and must make their own inquiries as to the currency, accuracy and completeness of this document and the information contained in it. The contents of this document should not be relied upon as representing NBN Co's final position on the subject matter of this document, except where stated otherwise. Any requirements of NBN Co or views expressed by NBN Co in this document may change as a consequence of NBN Co finalising formal technical specifications, or legislative and regulatory developments.

Environment

NBN Co asks that you consider the environment before printing this document.

1 Scope and purpose

1.1 Purpose

This Product Technical Specification sets out the technical specifications for the NBN Co Ethernet Bitstream Service (NEBS).

1.2 Scope

Sections 2, 3, 4, 5 and 6 of this Product Technical Specification describe the features of the NEBS, as offered by NBN Co. Any differences in availability or performance of these features between the NEBS supplied by means of the NBN Co Fibre Network and the NEBS supplied by means of the NBN Co Wireless Network are detailed in this Product Technical Specification, where necessary.

1.3 Definitions

Capitalised terms used but not defined in this Product Technical Specification have the meaning given in the Dictionary.

If a capitalised term used in this document is not defined in the Dictionary, then that term has the ordinary meaning commonly accepted in the industry.

2 Supported Service Types

This section provides a brief overview of the service types that Customer may choose to deploy using the NEBS.

2.1 Unicast Data Services

Each NEBS supports the flexible delivery of unicast data services. NEBS uses logical, Layer 2 circuits that may be used for a variety of higher-level data applications, including internet access.

These unicast services provide physical point-to-multipoint (aggregated) connectivity between one or more UNIs located at a Premises, and a centrally-aggregated NNI supplied to Customer by NBN Co.

2.2 IP-Based Telephony Services

Customer may choose to provision IP-based telephony services to End Users via:

- an ATA port (integrated into the NTD), with integrated SIP capabilities for legacy telephony applications (UNI-V) in relation to the NEBS supplied by means of the NBN Co Fibre Network
- access to external, Customer-supplied ATA devices using a UNI-D (as a unicast data service) in relation to the NEBS supplied by means of the NBN Co Fibre Network or NBN Co Wireless Network.

If Customer wishes to deliver IP-based telephony services, Customer must provide and manage its own IP-based telephony network capabilities that interface to, and operate across, the NBN Co Network.

All IP-based protocols and functions that Customer utilises to implement IP-based telephony services which comply with this Agreement will pass transparently through the NNI, AVC, CVC and UNI-D Product

Components. Where utilised in relation to the NEBS supplied by means of the NBN Co Fibre Network in respect of a Premises, the UNI-V will terminate all IP-based telephony protocols and functions at the Premises.

The NBN Co Network supports the provision of voice-grade, IP-based telephony services through the use of specific traffic handling mechanisms that are tailored toward deterministic performance for real-time, conversational applications. The TC-1 traffic class is designed to accommodate the needs of IP-based telephony applications.

Capacity within this traffic class is available to Customer via the UNI-D in relation to the NEBS supplied by means of the NBN Co Fibre Network or NBN Co Wireless Network, or the UNI-V in relation to the NEBS supplied by means of the NBN Co Fibre Network only, ensuring a consistent telephony service experience regardless of the interface used.

2.2.1 Legacy Telephony Applications

Using the UNI-V, Customer may access the NTD's in-built ATA port, with integrated SIP capabilities for legacy telephony applications. A range of configuration options enable Customer to migrate an existing telephony service, with minimal impact to in-building wiring or equipment installed at the Premises.

IP-based telephony services deployed using the UNI-V are automatically provisioned with a specific TC-1 capacity allocation.

Customer must interface its own IP-based telephony network with the IP-based telephony functions provided by the internal ATA of a UNI-V port. This will require integration testing between Customer and NBN Co prior to service deployment in accordance with this Agreement.

2.2.2 External ATA Device Support

Subject to the Product Description for the NBN Co Ethernet Bitstream Service, Customer may choose to deliver IP-based telephony services to a Premises using a dedicated, external ATA device using the UNI-D. The supply, powering and operation of this device are the responsibility of Customer.

Such devices will, subject to compatibility, appear to the NEBS as a regular data device, connected to a UNI-D port.

Customer may choose to operate the AVC in a manner that recognises the relative priority of telephony traffic above other applications sharing the same AVC.

Under this deployment scenario, the NEBS is agnostic[1] to the IP-based telephony protocols and data that Customer utilises for the delivery of IP-based telephony services to an End User.

When delivering IP-based telephony services using an external ATA through a UNI-D, Customer is able to utilise capacity from any of the three traffic classes TC-1, TC-2 or TC-4.

2.3 Multimedia Distribution Services

The NEBS supplied by means of the NBN Co Fibre Network supports an Ethernet-based Layer 2 virtual connection that supports multicast capabilities, for the efficient distribution of multimedia content by Customer to multiple End Users in a single CSA simultaneously.

---

[1] Note that specific CoS handling may be configured for voice packets (requires appropriate DSCP marking).

This capability is designed to support the secure and dynamic delivery of multiple media streams at a variety of bit-rates. This capability operates in an environment designed to allow other simultaneous services (such as unicast data and IP-based telephony services) to be provided by Customer on the same UNI-D.

3 Service Addressing

This section describes the options for service addressing, as required for accessing:

- AVC/CVC logical circuits through the NNI
- AVC logical circuits and traffic classes through the UNI-D

This section describes the IEEE802.1ad S-TAG/C-TAG structure, the allocation of S/C-VID values, and the addressing options available at the UNI-D. It describes the structure of the service frame with regard to fields used for individual service identification.

3.1 Addressing AVC/CVC Services through the NNI

The NEBS supports a common NNI addressing scheme for CVCs, using an IEEE802.1ad S-TAG to identify individual CVC services.

3.1.1 VLAN Tag Structure

When required for CVC/AVC service addressing (as described below), each S-TAG and C-TAG is required to contain the following fields:[2]

- S/C-TPID – Tag Protocol Identifier, used to identify the tag type
- S/C-PCP – Priority Code Point Identifier, used for priority marking
- S/C-CFI – Canonical Format Identifier, not used
- S/C-VID – VLAN Identifier, used for service identification

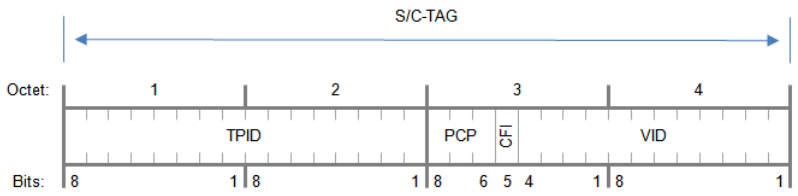

Figure 1: S/C-TAG Structure (4 Bytes)

These fields will be validated for all service frames at ingress to the NBN Co Network. Note that an ingress service frame must contain the same PCP value for both the S-TAG and C-TAG.

3.1.2 Tag Protocol Identifier (TPID) Formats (NNI)

[2] Refer IEEE802.1ad for explanation of S/C-TAG fields.

Table 1 describes the required TPID values for service frames at ingress to the NBN Co Network. The NNI TPID is set per NNI Group. Any received service frames that do not comply with these values will be discarded at ingress.

Interface	NNI Mode	S-TPID	C-TPID	Comment
NNI	Addressing Mode A	0x88A8 or 0x8100	0x8100	C-TPID value indicated is applicable to inner C-TAG. S-TPID value applicable to outer S-TAG.
	Addressing Mode C		N/A	Addressing Mode C utilises MAC forwarding for the AVC, and does not require a C-TPID.
	Addressing Mode D		N/A	Addressing Mode D utilises multicast group address forwarding for the Multicast AVC, and does not require a C-TPID.

Table 1: TPID (NNI) Requirements

Any tagged service frames with TPID settings outside of these values will be discarded at ingress.

3.1.3 Allocation of S/C-VID Values at the NNI

The allocation of S/C-VID values at the NNI must be co-ordinated between Customer and NBN Co.

When requested by Customer as part of a Product Order Form for a CVC or AVC, NBN Co will allocate each new CVC/AVC an internally-generated S/C-VID. This S/C-VID value will be returned to Customer in accordance with the NBN Co Operations Manual, and must be used for accessing the CVC/AVC at the NNI.

Customer may optionally elect to nominate the S/C-VID used to address each CVC/AVC service instance through the NNI by specifying a S/C-VID in the Product Order Form for the CVC/AVC, for the purpose of further alignment to its own backhaul network addressing schemes. Note that Customer is encouraged to use NBN Co's S/C-VID allocations, which will be unique to Customer's service. This will avoid any potential for S/C-VID mismatch between Customer and NBN Co.

For service addressing modes at the NNI that rely on MAC addressing for forwarding within the NBN Co Network, the allocation of a C-VID is not required.

3.1.4 CVC Addressing

CVCs are identified at the NNI using an outer IEEE802.1ad S-TAG, contained within each service frame. Each CVC within an NNI may be addressed and operated independently, allowing adjacent CVCs to be configured differently.

It is the responsibility of Customer to ensure that each supplied S-VID field conforms to the agreed service configuration. Any service frame received at the NNI with an S-VID that does not map to an agreed identifier for an active CVC service will be discarded.

At egress from the NBN Co Network at the NNI, the NEBS will insert the S-TAG with the agreed S-VID for identification of the CVC to Customer.

Within a CVC, a number of AVCs may be present. The mechanism used to address these individual AVCs depends upon the service being operated through the CVC.

The following service addressing modes are used at the NNI to access individual AVC services operating through a CVC.

3.1.5 AVC/CVC Service Addressing Mode A

AVC/CVC Service Addressing Mode A uses a two-level VLAN addressing scheme at the NNI, which is compliant with IEEE802.1ad (Provider Bridges) to identify individual 1:1 AVC and CVC services.

This mode is available for unicast data services between the NNI and UNI-D.

Figure 2 describes the frame structure for service frames presented at ingress to the NNI using AVC/CVC Service Addressing Mode A, highlighting the S-TAG and C-TAG provided by Customer, required to associate the service frame with an individual CVC/AVC.

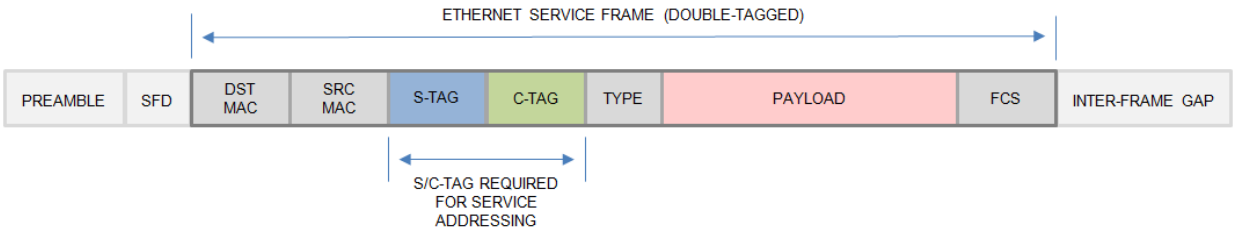

Figure 2: AVC/CVC Service Addressing Mode A Frame Format[3]

Services using this addressing mode use the inner IEEE802.1ad C- VID field to address each individual AVC within a CVC. This C-TAG is visible at the NNI, and for Default-Mapped and DSCP-Mapped UNI-D modes is stripped before passing across the UNI boundary.

The C-VID can be used to address up to 4000 individual AVCs through a single S-TAG. Note that the same C-VID may appear through different S-TAGs on a given NNI, even where both S-TAGs are directed to the same CSA. In such cases, the C-VIDs must always address different NTD UNI-Ds.

The S/C-PCP field is used to communicate priority information both across the UNI/NNI boundaries, and within the NBN Co Network.

AVC/CVC Service Addressing Mode A requires that traffic flowing in the downstream direction (from the Customer Network into the NNI) must be tagged with the appropriate S/C-VID settings. Traffic flowing in the upstream direction, upon ingress to the UNI, may utilise one of two addressing options (refer to section 3.2). It is the responsibility of Customer to ensure that all ingress traffic at the NNI is compliant with the assigned VID settings for each respective service.

[3] Refer IEEE802.3 for explanation of service frame fields.

3.1.6 AVC/CVC Service Addressing Mode C

AVC/CVC Service Addressing Mode C is only available in relation to the NEBS supplied by means of the NBN Co Fibre Network, and implements N:1 addressing for IP-based telephony applications using the UNI-V. These services require the frame format shown in Figure 3 at the NNI:

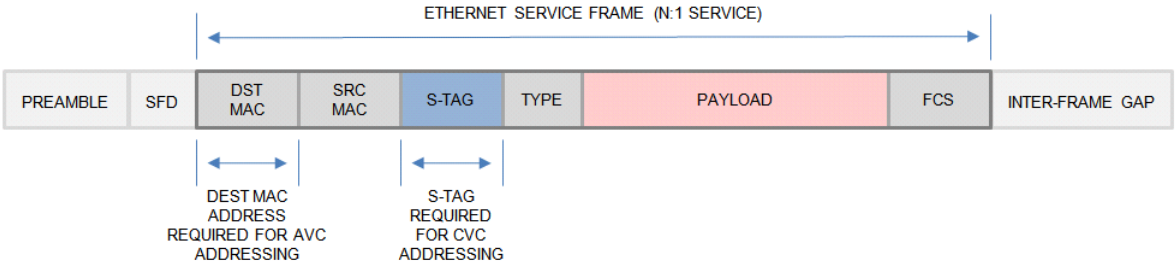

Figure 3: AVC/CVC Service Addressing Mode C Service Frame Format

Figure 3 describes the frame structure for service frames presented at ingress to the NNI for this type of service, highlighting the S-TAG provided by Customer, required to associate the service frame with an individual N:1 CVC, and the unicast Destination MAC address which identifies the individual destination UNI-V.

Under this addressing mode, there are no restrictions imposed by C- VID range limitations on the number of AVCs that can be addressed through an S-TAG.

3.1.7 AVC/CVC Service Addressing Mode D

AVC/CVC Service Addressing Mode D is only available in relation to the NEBS supplied by means of the NBN Co Fibre Network, and implements N:1 addressing for delivery of multicast Media Streams. These services require the frame format as shown in Figure 4 at the NNI:

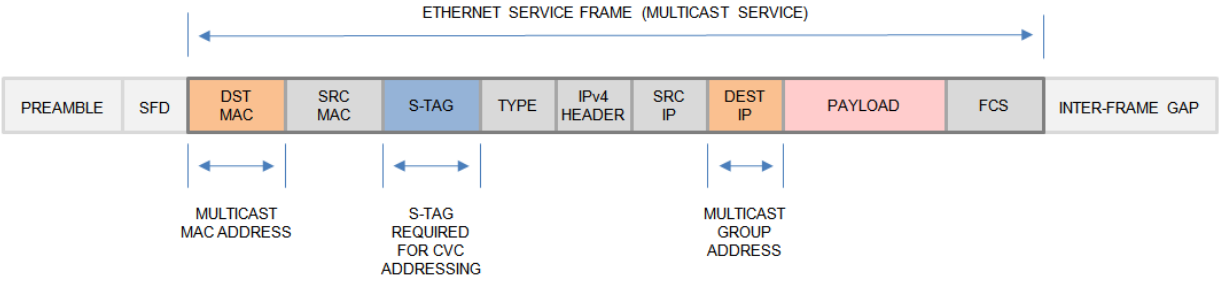

Figure 4: AVC/CVC Service Addressing Mode D Service Frame Format

Note that the NNI frame structure for this addressing mode is similar to that depicted in AVC/CVC Service Addressing Mode C, however, this addressing mode requires the presence of a multicast group address to support replication of the multicast Media Stream to a Multicast AVC using IGMPv3.

Under this addressing mode, there are no restrictions imposed by C-VID limitations on the number of Multicast AVCs accessible from the NNI that can be addressed through a single Multicast Domain.

All service frames received at the NNI are directed to a Multicast Domain specified by the S-TAG. Any service frames with a multicast group address that does not map to an active Media Stream for the relevant Multicast Domain, are discarded.

3.2 Addressing AVCs and Traffic Classes at the UNI-D

The UNI-D supports four addressing modes for accessing AVCs, and indicating the priority of service frames across the UNI-D:

- Default-Mapped
- DSCP-Mapped
- Priority-Tagged
- Tagged

These options for addressing services at the UNI-D are shown in Table 2.

UNI-D Mode	Maximum Number of AVCs addressable at UNI-D	Support for Multicast AVCs at the UNI-D	Ability to communicate priority information across UNI-D?	Comments
Default-Mapped	1	Y	N	Untagged service frames that carry no Layer 2 priority information, as per IEEE802.3.
DSCP-Mapped	1	Y	Y	Untagged service frames that carry no Layer 2 priority information, as per IEEE802.3, where priority information is encoded into the DSCP field, as per RFC2474 for both IPv4 and IPv6.
Priority-Tagged	1	N	Y	Service frames at the UNI-D that carry Layer 2 Priority Information in the VLAN tag, as per IEEE 802.1p, where priority information is encoded into the VLAN Priority-Code-Point (PCP) field.
Tagged	1	N	Y	

Table 2: AVC Addressing Modes at the UNI-D

The addressing mode must be specified at time of solution definition, and determines how Customer interfaces to the AVC and UNI-D.[4] These modes have no impact of the operation or allocation of AVC C-TAGs at the NNI.

3.2.1 Tag Protocol Identifier (TPID) Formats (UNI-D)

Table 3 describes the required TPID values for service frames at ingress to the NBN Co Network. The UNI TPID is set per UNI. Any received service frames that do not comply with these values will be discarded at the UNI ingress.

Interface Mode	S-TPID	C-TPID	Comment
Default-	N/A[5]	N/A	UNI-D operating in Default-Mapped or DSCP-Mapped modes do not

[4] Note the limitations on addressing mode and AVC traffic class combinations in Table 28 and Table 29.

Mapped			support a S-TAG or C-TAG at ingress. Any tagged frames ingressing at the UNI-D may be discarded. For UNI-D, the C-TPID is supplied by NBN Co.
DSCP-Mapped			
Priority-Tagged		0x8100	Priority-Tagged UNI-D require all ingress service frames to comply with the C-TPID.
Tagged		0x8100	Tagged UNI-D require all ingress service frames to comply with the C-TPID, and subscribed C-VID.

Table 3: TPID (UNI-D) Requirements

Priority-Tagged and Tagged UNI-D modes require Customer to specify a C-VID value. The valid range of C-VID values is shown below in Table 4.

Interface Mode	NBN Co Network	Allowed CE-VLAN ID (C-VID)	Comment
Default-Mapped	Fibre and Wireless	N/A	C-VID is not supported at the UNI for this mode.
DSCP-Mapped	Fibre and Wireless	N/A	C-VID is not supported at the UNI for this mode.
Priority-Tagged	Fibre and Wireless	0 or Null	In Priority-Tagged mode, a C-VID allocation of anything other than 0 or Null (unpopulated) may result in unsupported behaviours.
Tagged	Fibre	2 – 4004	In Tagged mode C-VID allocations must match the C-VID specified by Customer at the time Customer orders the associated AVC C-VID allocations outside of the allowed range will result in frames being discarded.
	Wireless	2 - 4001	

Table 4: C-TAG C-VID (UNI-D) Requirements

4 Class of Service (CoS)

The NBN Co Network implements a number of traffic classes that are distinguished in capability and performance, designed to accommodate the widest variety of higher-layer applications. Customer may take advantage of these traffic classes to provide more tailored performance and effective utilisation of the NBN Co Network.

4.1 Traffic Classes

The supported traffic classes are described in Table 5.

Traffic Class	Example Applications	Specification
TC-1	Voice	CIR

[5] S-TPID appended by NBN Co Network and not visible at UNI-D.

TC-2	Streaming standard and high definition video and real-time collaboration applications	CIR
TC-4	Best-effort data	PIR[6] (AVC) CIR[7] (CVC)
TC-MC	Delivery of Media Streams using Layer 2 multicast	CIR[8]

Table 5: Supported Traffic Classes

Customer may use these classes to allocate service capacity in a manner that reflects the demands and operation of its end-to-end applications. The performance attributes of each respective traffic class are described in section 7.8.

Note that for traffic classes where Customer is required only to specify the CIR (i.e. for which the PIR is not specified), the PIR will be automatically set by NBN Co to align with the specified CIR. For example, the TC-1 traffic class of the unicast AVC allows only the specification of the CIR. If Customer specifies an AVC TC-1 CIR of X Mbps in relation to a unicast 1:1 AVC, then the PIR will also be set by NBN Co to X Mbps.

For traffic classes which do not support a CIR (e.g. AVC TC-4), no CIR is provided.

4.1.1 TC-1 Description

The TC-1 traffic class is targeted towards real-time, interactive multimedia applications, with the following characteristics:

- Low bit-rate
- Low frame delay, frame delay variation, frame loss

The attributes of this class are aligned to the characteristics of the DSCP Expedited Forwarding per-hop behaviour described in RFC4594.

TC-1 provides a committed level of premium capacity with limited ability to burst above its CIR, suitable for applications that require deterministic performance and are likely to be sensitive to packet loss.

4.1.2 TC-2 Description

The TC-2 traffic class is targeted towards real-time, interactive multimedia applications, with the following characteristics:

- High bit-rates, and large Ethernet frame sizes

[6] TC-4 is implemented as PIR at the AVC, meaning that AVC TC-4 capacity is shared with other traffic classes across the UNI and is available for TC-4 when higher-priority traffic classes are not utilising it.

[7] TC-4 is implemented as CIR at the CVC, meaning that CVC TC-4 capacity cannot be shared with other CVCs or traffic classes across the NNI.

[8] TC-MC is implemented as CIR in respect of each Media Stream at the Multicast Domain, meaning that TC-MC capacity cannot be shared with other Multicast Domains, Media Streams or traffic classes across the NNI.

- Low frame delay, frame delay variation, frame loss

The attributes of this class are aligned to the characteristics of the DSCP Assured Forwarding (**AF**) per-hop behaviour described in RFC4594.

TC-2 provides a committed level of premium capacity with limited ability to burst above its CIR, suitable for applications that require deterministic performance and are likely to be sensitive to frame delay variation (FDV/jitter) and frame loss (FLR).

4.1.3 TC-4 Description

The TC-4 traffic class is targeted towards "best effort" applications, as characterised by the DSCP Default Forwarding per-hop behaviour, described in RFC4594.

4.1.4 TC-MC Description

The TC-MC traffic class is targeted towards multicast delivery of uni-directional (downstream) media content.

TC-MC is designed to provide a committed level of capacity with no ability to burst above its CIR.

4.2 Traffic Class Scheduling

Traffic is scheduled within the NBN Co Network using strict priority, according to the traffic class.

4.3 Bandwidth Profile Parameter Definitions

This section provides clarification of the bandwidth profile parameters used within the NBN Co Network.

4.3.1 Calculation of Information Rate

All Information Rate limitations, including as set out in this Product Technical Specification, are enforced at ingress to the NBN Co Network, and are calculated on Customer Layer 2 Ethernet service frames, over the series of bytes from the first bit of the Destination MAC Address through the last bit of the Frame Check Sequence as defined at the NNI.

IEEE802.3 physical-layer fields such as the Preamble, Start of Frame Delimiter and Inter-Frame Gap are not included in the bandwidth profile, except where the bandwidth profile is equivalent to the negotiated physical port speed, resulting in a degraded useable payload such as is the case with the AVC TC-4 1000/400 Mbps bandwidth profile.

Note that the effective Layer 2 payload rate of the NBN Co Network will also degrade slightly for lowest-sized Ethernet service frames. This is the expected behaviour for Ethernet-based services for which the bandwidth profile is based on the service frame definitions within section 3. It is the responsibility of Customer to accommodate any payload rate degradation as a result of Layer 2 frame sizes and physical-layer overhead.

4.3.2 Committed Information Rate

CIR defines a level of data throughput for which service frames are delivered according to the performance objectives of the applicable traffic class.

4.3.3 Committed Burst Size

The CBS is set by NBN Co for each CIR specification, and cannot be modified. The CBS may differ between traffic classes, and may be specified differently for the UNI-D and NNI, and between the AVC and CVC.

The CBS is used by the policing functions of the NBN Co Network at ingress to the NBN Co Network to determine whether a stream of ingress data complies with the subscribed CIR. Customer is responsible for ensuring that all ingress traffic is shaped to comply with the CIR/CBS as specified for the required traffic class and interface, before presentation to the UNI-D or NNI as relevant.

4.3.4 Peak Information Rate

PIR is defined as the maximum data throughput that may be delivered by the NEBS. Note that traffic capacity in excess of the CIR and within the PIR will be carried through the NBN Co Network without any performance objectives. Traffic that exceeds the PIR will be discarded at ingress to the NBN Co Network.

4.3.5 Peak Burst Size

The PBS defines the length of a burst of Layer 2 traffic (either in bytes or milliseconds as set out below) that may be received at ingress to the NBN Co Network for a burst of traffic that pushes the average Information Rate above the configured bandwidth profile for a PIR traffic class. Traffic in excess of the PBS will be discarded by the NBN Co Network. The PBS is set by NBN Co for each PIR specification, and cannot be modified.

The PBS is used by the policing functions of the NBN Co Network at ingress to the NBN Co Network to determine whether a stream of ingress data complies with the subscribed PIR. Customer is responsible for ensuring that all ingress traffic is shaped to comply with the PIR/PBS as specified for the required traffic class and interface, before presentation to the UNI-D or NNI as relevant.

4.4 Bandwidth Specification Model – AVC

Customer is required to select the desired amount of capacity for each traffic class required for the AVC at time of order, as part of submitting a Product Order Form for an AVC.

The selectable AVC bandwidth profiles components for traffic classes are shown in Table 6 and Table 7 and specified limitations are enforced at the UNI.

Traffic Class	Component	Units	Description
TC-1	CIR	Mbps	CIR requirement for TC-1. Available settings are described in section in 6.3.2.7
	CBS[9]	Bytes	2,000
TC-2	CIR	Mbps	CIR requirement for TC-2 Available settings are described in section 6.3.2.7
	CBS[10]	msec	10
TC-4	PIR	Mbps	PIR requirement for TC-4. Available settings are described in section 6.3.2.7
	PBS	msec	10 Downstream at the NNI[11]
		Bytes	40,000 Upstream at the UNI-D[12]

Table 6: Bandwidth Profile Components – 1:1 Unicast AVC

Refer to section 6.3.2.7 for supported AVC bandwidth profiles.

Note that, the TC-1 CIR capacity is allocated within the TC-4 PIR. For example, a 12Mbps TC-4 PIR with a 0.15Mbps TC-1 CIR will be delivered with a total AVC capacity of 12Mbps, and when TC-1 is transmitting, this subtracts from the data that can be transmitted in TC-4. Details are set out in the Product Description for the NBN Co Ethernet Bitstream Service.

Traffic Class	Component	Units	Description
TC-MC	CIR	Mbps	CIR requirement for Multicast AVC Available settings are described in section 6.3.2.9
	CBS	Bytes	2,000

Table 7: Bandwidth Profile Components – Multicast AVC

Refer to section 6.3.2.9 for supported Multicast AVC bandwidth profiles.

[9] The AVC TC-1 CBS is bi-directional, set by NBN Co, and cannot be modified by Customer.

[10] The AVC TC-2 CBS is bi-directional, set by NBN Co, and cannot be modified by Customer.

[11] Specific PBS setting in Bytes is dependent on the TC-4 PIR (bandwidth profile) selected.

[12] The AVC TC-4 PBS is set by NBN Co and cannot be modified by Customer.

4.5 Bandwidth Specification Model – CVC

Customer is required to nominate the capacity for each required traffic class within the CVC at time of order, as part of submitting a Product Order Form for the CVC. The CVC bandwidth profile components for traffic classes are shown in Table 8, Table 9 and Table 10 and specified limitations are enforced at the NNI.

Traffic Class	Component	Units	Description
TC-1	CIR	Mbps	CIR requirement for TC-1 Available settings are detailed in section 6.4.7
	CBS[13]	Bytes	16,000
TC-2	CIR	Mbps	CIR requirement for TC-2 Available settings are detailed in section 6.4.7
	CBS[14]	msec	10
TC-4	CIR	Mbps	CIR requirement for TC-4 Available settings are detailed in section 6.4.7
	CBS[15]	msec	10

Table 8: Bandwidth Profile Components – 1:1 Unicast CVC

Note: In relation to CVC TC-4 speed tiers of 4000 Mbps or greater, the maximum Committed Burst Size (CBS) value supported by NBN Co is 4 megabytes, and will not support a time-based 10 millisecond (ms) CBS value based on the CVC CIR bandwidth profile chosen by the Customer.

Traffic Class	Component	Units	Description
TC-1	CIR	Mbps	CIR requirement for TC-1. Available settings are detailed in section 6.4.7
	CBS[16]	Bytes	16,000

Table 9: Bandwidth Profile Components – N:1 Unicast CVC

Traffic Class	Component	Units	Description

[13] The CVC TC-1 CBS is set by NBN Co, and cannot be modified by Customer.

[14] The CVC TC-2 CBS is set by NBN Co, and cannot be modified by Customer.

[15] The CVC TC-4 CBS is set by NBN Co, and cannot be modified by Customer.

[16] The CVC TC-1 CBS is set by NBN Co, and cannot be modified by Customer.

TC-MC	CIR	Mbps	CIR requirement for TC-MC Available settings are detailed in section 6.4.7
	CBS[17]	Bytes	2,000

Table 10: Bandwidth Profile Components – Multicast Domain

Note that capacity specified within a CVC bandwidth profile is inclusive of the S/C-TAGs, as described in the service frame definition in Figure 2.

Refer to section 6.4.7 for supported CVC bandwidth profiles.

4.6 Traffic Contention and Congestion Management

Customer may control End User experience of applications using the unicast functionality of the NEBS, through contention applied through dimensioning of capacity between the AVC and CVC.

Contention may be applied at the traffic class level, allowing Customer to independently control the economics and operation of each traffic class. This is controlled by Customer through careful dimensioning of AVC and CVC capacity, on a traffic class basis, to ensure a level of contention appropriate for each respective higher-layer application.

Customer must be aware of the implications of contending AVC and CVC components, as this will effectively degrade the performance of Customer Products and Downstream Products.

4.7 Priority Identification

Customer may use a number of methods to indicate relative priority of individual service frames depending on the NBN Co Network interface. The available methods differ for the UNI and NNI, as shown in Table 11.

Marking Scheme	UNI-D	NNI
PCP field (IEEE802.1p)	Y[18]	Y
DSCP (RFC2474)	Y[19]	N
Default-Mapped (Un-marked)	Y[20]	N

Table 11: Priority Marking Options

[17] The CVC TC-1 CBS is set by NBN Co, and cannot be modified by Customer.

[18] Supported for Priority-Tagged and Tagged UNI-D modes only.

[19] Supported for DSCP mapped UNI-D mode only.

[20] Supported for Default mapped UNI-D mode only.

Note that the DSCP priority marking for ingress traffic at the UNI-D is supported only for traffic encapsulated as IP over Ethernet . Note also the limitations on addressing mode and AVC traffic class combinations in Table 28 and Table 29.

4.8 Priority Encoding

This section describes how Customer Equipment should encode priority information into service frames that ingress the NBN Co Network in order to ensure those frames are forwarded in the correct NBN Co traffic classes.

Customer must conform to the IEEE802.1P and DSCP settings indicated in Table 12 to map traffic into traffic classes at the UNI and NNI. Consequently:

- These ingress assignments are valid for ordered traffic classes only
- For all NNI configurations, any ingress traffic that does not map to a provisioned CVC traffic class will be discarded at ingress
- For UNI-D configured as DSCP-Mapped, any ingress traffic (IPv4 or IPv6) that does not map to a provisioned AVC traffic class will be mapped to the TC-4 traffic class.
- For UNI-D configured as Default-Mapped, all ingress traffic will be mapped to the Default-Mapped traffic class, irrespective of DSCP markings
- For UNI-D configured as Priority-Tagged, any ingress traffic that does not map to a traffic class provisioned in respect of the associated AVC will be discarded at ingress
- For UNI-D configured as Tagged, any ingress traffic that does not map to a traffic class provisioned in respect of the associated AVC will be discarded at ingress

Customer will be required to specify all required UNI-D DSCP and NNI PCP assignments during the on-boarding phase for the NEBS.

Traffic Class	PCP/DSCP Assignment (Ingress)		
	CoS (UNI-D & NNI)	DSCP[21,22] (UNI-D)	
		DSCP	DSCP (Decimal)
TC-1	5	CS5, EF	40 – 47
TC-2	4	CS4, AF 41 - 43	32 - 39
TC-MC[23]	4[24]	N/A	N/A

[21] DSCP-mapping available at UNI-D only.

[22] Ingress traffic with DSCP markings which do not map to a provisioned AVC traffic class will be carried in TC-4

[23] Multicast AVCs do not accept ingress service frames at the UNI-D.

[24] Only applicable at the NNI.

TC-4	0	CS7, CS6 CS3, AF31 – 33, CS2, AF21 – 23, CS1, AF 11 – 13 CS0, Default	48 – 63, 16 – 31[25], 8 – 15, 0 – 7

Table 12: Class of Service Encoding

Note that, in relation to the NEBS supplied by means of the NBN Co Fibre Network, when a Multicast AVC is active on a DSCP-Mapped UNI-D, any ingress IGMP traffic will be carried irrespective of its DSCP markings using the following traffic class:

- TC-4 for the associated unicast AVC and CVC
- TC-MC for Multicast Domain

When there is no Multicast AVC active on the UNI-D, any ingress IGMP traffic will be mapped upstream to the AVC as per the mapping policy of the UNI-D.

4.9 Priority Decoding

This section describes how service frames carried in NBN Co traffic classes will have priority encoded at the egress from the NBN Co Network. Egress CoS decoding is described in Table 13.

Traffic Class	PCP/DSCP Assignment (Egress)
	CoS (UNI-D & NNI)
TC-1	5
TC-2	4
TC-MC	4[26]
TC-4	0[27]

Table 13: Class of Service Decoding

Multicast IGMP upstream traffic is forked within the NBN Co Fibre Network to deliver service frames over both the Multicast Domain and the associated unicast CVC with separate priority settings at NNI egress.

[25] This range may be re-allocated to a separate traffic class in future

[26] Applies only to upstream IGMP traffic carried through the Multicast Domain at egress from NNI.

[27] Includes upstream IGMP traffic carried through the CVC.

5 Multicast

The NEBS supplied by means of the NBN Co Fibre Network provides an Ethernet-based Layer 2 multicast functionality for the support of Customer's higher-layer, IP-based multicast architecture, as typically used for IPTV applications.

The NEBS supplied by means of the NBN Co Fibre Network implements Layer 2 multicast functions using a dedicated Multicast Domain (a functional variant of the CVC which is specific to multicast applications) and a Multicast AVC (a functional variant of the AVC which is specific to multicast applications).

The Multicast Domain must terminate on an NNI, and may use any NNI supplied by NBN Co to Customer for the delivery of unicast services in the same CSA as the Multicast Domain, or be provisioned on its own dedicated NNI.

The Multicast Domain is specified in terms of overall capacity in a similar manner to a unicast CVC. In addition, the Multicast Domain requires the further specification of individual Media Streams by Customer within the Multicast Domain, as required for each specific media flow (e.g. an IPTV channel or audio stream) into the NBN Co Fibre Network. These Media Streams are then replicated by the NBN Co Fibre Network to individual Multicast AVCs, in response to Multicast AVC IGMPv3 leave/join requests.

The supply of the Multicast AVC to Customer is on the condition that Customer also acquire a unicast AVC in conjunction with the Multicast AVC (mapped to the same UNI-D). The Multicast AVC will utilise the unicast capacity as an upstream control path.

5.1 Multicast Architecture

The multicast functionality of the NEBS supplied by means of the NBN Co Fibre Network is based on IEEE802.3 Ethernet multicast addressing and operation, using IGMPv3[28] to manage media stream replication.

The multicast functionality of the NEBS supplied by means of the NBN Co Fibre Network is designed to monitor (proxy) the upstream unicast data stream for IP-layer IGMP multicast packets. These IGMP packets are designed to identify channel-change events in a multicast service, and are used to determine which of Customer's individual Media Streams to transmit in the downstream Multicast AVC.

Currently, only IPv4 multicast services are supported by the Multicast AVC and Multicast Domain.

5.2 Multicast Operation

The multicast functionality of the NEBS supplied by means of the NBN Co Fibre Network is implemented using a dedicated Multicast AVC and dedicated Multicast Domain, operating in the downstream direction only. The Multicast Domain requires the presence of a bi-directional, unicast AVC and CVC for the communication of channel-change and control information from the End User back into the Customer Network.

[28] The Multicast capabilities are backward compatible to IGMPv2. IGMPv1 is not supported.

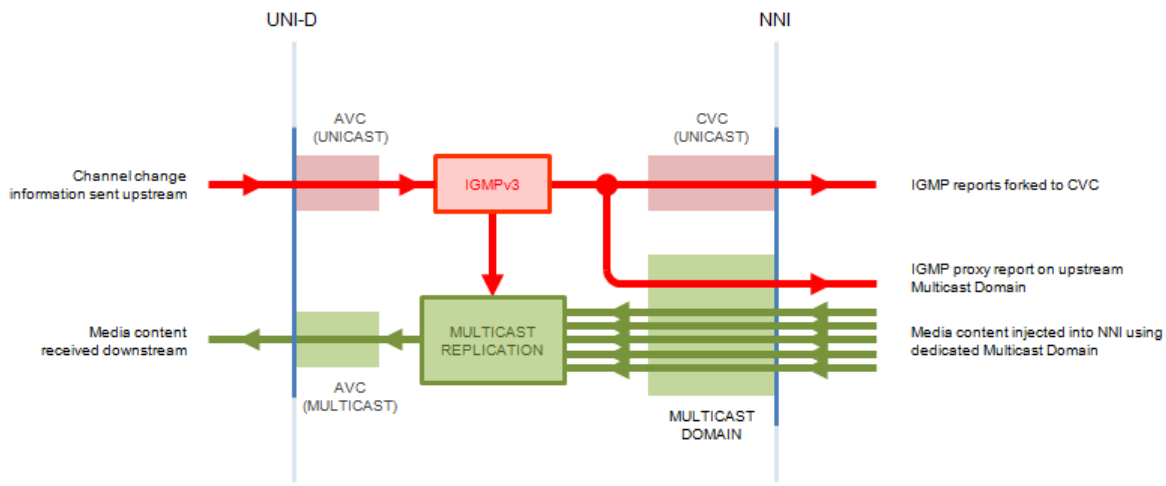

Figure 5: Multicast Operation

Figure 5 depicts the operation of a multicast service to a single UNI-D. The upper (red) data flow represents a unicast AVC that supports bi-directional data services. This AVC carries the End User's channel change information from the UNI-D, through the CVC, to the NNI for transmission to the Customer Network.

The NBN Co Fibre Network intercepts this information to detect any changes to the multicast data flow requested by the End User, and proxies this information to Customer through the NNI.

The lower (green) data flow represents the downstream, multicast traffic flow. This data is injected by Customer at the NNI on a single Multicast Domain. It is then replicated to Multicast AVCs, in accordance with the IGMP information as intercepted in the upstream traffic of the AVC.

A residential gateway interfacing with UNI-D must support "IGMP Proxy" if implemented by Customer as a router. However, if Customer configures the residential gateway as a bridge, it must not implement "Report Suppression" (in case IGMPv2 is used).

5.3 UNI-D Interfacing

The multicast functionality of the NEBS supplied by means of the NBN Co Fibre Network is supported on configurations where the Multicast AVC and the associated unicast AVC are operating on the same UNI-D. The UNI-D may be operating in DSCP-Mapped or Default-Mapped mode.

When enabled in respect of an Ordered Product, the multicast functions of NBN Co Fibre Network will examine upstream IGMP messages to build the multicast group association. The NBN Co Fibre Network will also insert a public IPv4 address as the source IP address in periodic IGMP query messages at UNI-D egress as described in section 5.5.2.

5.3.1 IGMP Fast Leave

The multicast functions of NBN Co Fibre Network implement an IGMP fast leave, meaning that a Media Stream will be disconnected as soon as the last remaining End User Equipment connected to a Multicast AVC through a UNI-D receiving the Media Stream issues a leave request.

The NBN Co Fibre Network monitors multicast group membership through group specific query messages and tracks when each one issues a leave request. When the last leave request is received for a particular Media Stream, that Media Stream will be disconnected.

To support configurations where multiple End User devices are hidden behind the gateway, the residential gateway must be configured to proxy IGMP messages. Without the proxy function a Media Stream being received by multiple End User devices may be disconnected if any one of the End User devices issues a leave request for that Media Stream.

5.4 NNI Interfacing

At the NNI, multicast services are addressed using AVC/CVC Service Addressing Mode D (refer to section 3.1.7).

Each Media Stream configured within associated Multicast Domain must operate with a unique Media Stream IP group address (Class D IPv4 Address).

A multicast Class D IPv4 Address is mapped to a host multicast MAC address by placing the low-order 23-bits of the IP address into the low-order 23 bits of the Ethernet MAC address, giving a range of available host multicast MAC addresses from 01-00-5E-00-00-00 through 01-00-5E-7F-FF-FF. Because there are 28 significant bits in a multicast Class D IPv4 Address, more than one multicast Class D IPv4 Address may map to the same host multicast MAC address.

Customer must therefore ensure that the lower 23 bits of the multicast Class D IP address for each Multicast Stream within a Multicast Domain is unique to avoid address overlapping problems.

Customer must ensure multicast group addresses comply with IANA Guidelines for IPv4 multicast address assignments. Media Stream IP group addresses in the range 224.0.0.0 through 224.0.0.255 will be rejected by NBN Co.

5.5 Multicast IGMP Messaging

5.5.1 IGMP Messaging at the NNI

Customer will receive upstream IGMP messages (through the NNI) over both the unicast CVC and the Multicast Domain.

In the upstream direction, the Multicast Domain, via a Multicast proxy function, will deliver (through the NNI) a subset of IGMP messages for successful operations, including responses to Customer IGMP queries and the first join and last leave request per Media Stream.

Customer may nominate an IGMP Report Source Address on the Multicast Domain. In the absence of a Customer-nominated IGMP Report Source Address, the IGMP report messages will use the NBN Co public IP address of 49.0.15.254.

In the upstream direction, the unicast CVC will deliver (through the NNI) IGMP report messages for all successful join/leave operations and membership reports. These IGMP report messages can be used by Customer for reporting purposes as the Multicast Domain only sends a subset of IGMP report messages.

No IGMP report messages will be received on either the Multicast Domain or unicast CVC for unsuccessful operations.

5.5.2 IGMP Messaging at the UNI-D

The End User will receive IGMP queries at the UNI-D for multicast service management between the NBN Co Fibre Network and the End User Equipment.

All IGMP queries generated by the NBN Co Fibre Network at the UNI-D will use the NBN Co public IP address of 49.0.15.254. This attribute is not configurable by Customer and is not impacted by Customer selecting an alternate IGMP Report Source Address for IGMP report messages received at the NNI.

IGMP queries are generated by the NBN Co Fibre Network, and sent downstream through the UNI-D every 125 seconds on any Multicast AVC with one or more active Media Stream replications.

The Multicast AVC is able to handle up to 5 upstream Media Stream change requests per second. Exceeding this rate may cause upstream IGMP requests to be dropped.

IGMP report messages, at ingress to the UNI-D, must be encapsulated as IP over Ethernet.

5.6 Multicast Performance

Customer must consider the following performance attributes when designing its IPTV service architecture to utilise multicast capabilities:

- Multicast Domain capacity management
- Multicast AVC capacity management
- Media Stream capacity management

5.6.1 Multicast Domain Capacity Management

The Multicast Domain must be dimensioned as equal to, or greater than, the aggregate Media Stream capacity. Admission controls are applied to Media Streams at ingress to the Multicast Domain as shown in Figure 6.

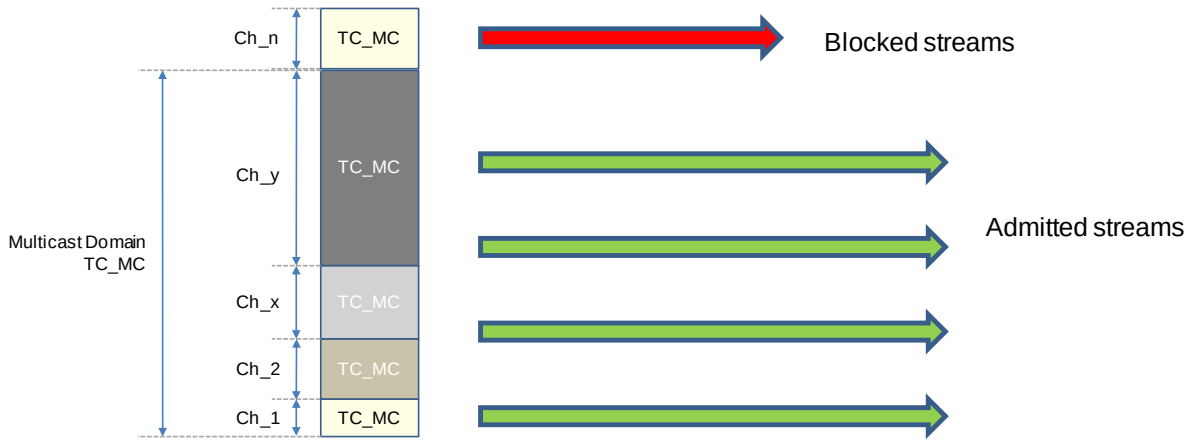

Figure 6: Multicast Domain Capacity Management

No signalling notification will be provided to Customer by the NBN Co Network when a Media Stream is blocked.

5.6.2 Multicast AVC Capacity Management

Admission controls are applied to Media Streams at ingress to the Multicast AVC.

Requests to join a Media Stream are rejected where the addition of the requested Media Stream would exceed the configured capacity of the Multicast AVC.

No controls are applied to the number of Media Streams being streamed on a Multicast AVC provided that the aggregate capacity does not exceed the configured Multicast AVC capacity.

No signalling notification will be provided to Customer by the NBN Co Network when a request to join a Media Stream is rejected.

5.6.3 Media Stream Capacity Management

Customer must nominate the peak capacity for each Media Stream at the time of submitting a Product Order Form, and each Media Stream is monitored at ingress to the Multicast Domain.

Customer is encouraged to implement Forward Error Correction in the Customer Network in relation to each Media Stream to ensure the best available End User experience of the IPTV service or other Customer Product or Downstream Product, which Customer must factor into calculations when determining the required peak bandwidth capacity.

In cases where there is an Exceeded Configured Peak Bandwidth Event, forwarding of Media Stream frames from the non-conforming Media Stream is suspended by the NBN Co Network until the Media Stream has conformed to the configured peak bandwidth.

No signalling notification will be provided to Customer through the NNI when an Exceeded Configured Peak Bandwidth Event occurs and a Media Stream is suspended.

6 Product Component Attributes

6.1 User Network Interface (UNI)

The supported UNI variants are as follows:

- UNI-D: data UNI (Ethernet port) (available as a variant of the UNI Product Component of the NEBS)
- UNI-V: voice/telephony UNI (analogue POTS port) (available as a variant of the UNI Product Component of the NEBS supplied by means of the NBN Co Fibre Network only).

Each UNI is logically connected to an NNI via an AVC and CVC. A UNI-D optionally supports a single Multicast AVC in addition to a single unicast AVC under the NEBS supplied by means of the NBN Co Fibre Network.

6.1.1 UNI-D

Each UNI-D is regarded as a fully independent interface, operating in total isolation from any other UNI residing on the same NTD.

6.1.1.1 UNI-D Interface Attributes

The following interface modes are supported for UNI-D:

- 10/100/1000BASET/TX (electrical, auto-negotiated speed and full/half-duplex)
- 100BASE-T (electrical, fixed speed, auto-negotiated full/half-duplex)

When no AVC logical services are active on the UNI-D (i.e. all AVCs have been logically disconnected by Customer), the UNI-D will be de-activated in accordance with this Agreement.

6.1.1.2 UNI-D Scalability Factors

The UNI-D is scalable in terms of capacity and services. Each UNI-D has two capacity metrics that define its ability to carry Customer Products and Downstream Products.

6.1.1.2.1 Line Rate

The Line Rate defines the rate at which the physical interface will transfer data (**Line Rate**). The UNI-D supports the following Ethernet Line Rates:

- 10Mbps
- 100Mbps
- 1000Mbps

The Line Rate sets the maximum bound on the information-carrying capacity of the link. Customer must be familiar with the inherent limitations of Ethernet in relation to the impact of framing overhead and asynchronous operation on bandwidth efficiency, and accommodate this within any capacity allocation.

By default, the UNI-D will be configured to auto-negotiate the Line Rate with the End User Equipment attached to the UNI-D. An active UNI-D may be configured by NBN Co as a 100Mbps interface if required by Customer.

Customer is responsible for ensuring that the UNI-D is operating with a Line Rate that is sufficient to carry the requested AVC capacity, using auto-negotiation or a fixed Line Rate setting requested by Customer.

Customer is also responsible for the Duplex mode of the UNI-D.

NBN Co is not responsible for any traffic loss at the UNI-D that may result due to the UNI-D negotiating a Line Rate or Duplex mode with any attached device beyond the NBN Co Network boundary, or being configured to a specific Line Rate that is insufficient to deliver the required AVC capacity.

6.1.1.2.2 Information Rate

The Information Rate defines the amount of logical Layer 2 capacity assigned to the UNI (**Information Rate**). This is calculated using the aggregate AVC bandwidth profiles active on the UNI-D.

A UNI-D is capable of supporting an Information Rate up to the active Line Rate. For example,[29] a UNI-D that has an auto-negotiated Line Rate of 100Mbps is capable of supporting an AVC with a PIR of 100Mbps.

Note that once provisioned, AVC capacity will not be automatically re-adjusted as a result of changing Line Rates through auto-negotiation. Should a UNI-D auto-negotiate to a Line Rate less than the requested AVC rate, the End User may experience increased frame loss in excess of the frame loss targets for each traffic class on the provisioned AVC.

[29] Note that this is an illustrative example only, and does not take into account Ethernet protocol overhead.

6.1.1.2.3 AVC Support

In relation to the NEBS supplied by means of the NBN Co Fibre Network, the UNI-D functionally supports a single, bi-directional, unicast AVC and an optional, uni-directional Multicast AVC.

In relation to the NEBS supplied by means of the NBN Co Wireless Network, the UNI-D functionally supports a single, bi-directional, unicast AVC.

6.1.1.3 UNI-D Functional Attributes

6.1.1.3.1 Frame Forwarding

The UNI-D implements forwarding of service frames as per IEEE802.1ad, section 8.6.

Destination MAC Address	Application	Default Behaviour	Optional Configurable Behaviour
01-80-C2-00-00-00	Bridge Group Address	Discard	None
01-80-C2-00-00-01	IEEE Std 802.3 PAUSE	Discard	None
01-80-C2-00-00-02	LACP/LAMP	Discard	None
	Link OAM	Discard	None
01-80-C2-00-00-03	IEEE Std. 802.1X PAE address	Discard	None
01-80-C2-00-00-04 - 01-80-C2-00-00-0F	Reserved	Discard	None
01-80-C2-00-00-10	All LANs Bridge Management Group Address	Discard	None
01-80-C2-00-00-20	GMRP	Discard	None
01-80-C2-00-00-21	GVRP	Discard	None
01-80-C2-00-00-22 - 01-80-C2-00-00-2F	Reserved GARP Application addresses	Discard	None
01-80-C2-00-00-30 - 01-80-C2-00-00-3F	CFM	Tunnel[30]	None

Table 14: UNI-D Frame Forwarding Details

[30] Tunnelling supported for Maintenance Domains (MD) 4, 5, 6, 7.

Note the following definitions for the purposes of the above table:

- Discard – the service frame will be discarded at ingress to the NBN Co Network
- Tunnel – the service frame is passed to the AVC/CVC and carried through the NBN Co Network

Note that ingress frames to the UNI-D (in Default-Mapped or DSCP-Mapped modes) that contain an IEEE802.1Q VLAN tag may be discarded.

6.1.1.3.2 Auto-Negotiation

Each UNI-D provided at the NTD individually supports auto-negotiation as per IEEE802.3ab.

6.1.1.3.3 MAC Address Limitations

Each UNI-D is capable of supporting up to eight simultaneous MAC source addresses. This imposes a limit on the number of Layer 2 devices that Customer may allow to connect directly to each UNI-D. Any attempt to connect a number of devices directly to a UNI-D that exceeds this limit will result in traffic from the newly-attached devices being discarded.

The NBN Co Network will learn the first eight MAC source addresses detected at ingress to the UNI-D, based upon ingress service frames. A MAC address ageing function ensures that any obsolete MAC addresses are removed from the active list, after a period of 300 seconds.

Note that this limitation applies for the UNI-D irrespective of the service type and does not imply MAC address-based forwarding for unicast services based on 1:1 VLANs.

Customer should use a device that performs Layer 3 routing to interconnect to the UNI-D. If Customer does not do so, Customer accepts the consequences of any issues arising from MAC address restrictions.

6.1.1.3.4 Resiliency

By default, the UNI-D is an unprotected physical interface. If an unprotected UNI-D suffers a failure, all services being delivered across that UNI will be disrupted.

6.1.2 UNI-V

This section describes the functional attributes of the UNI-V, which is only supplied as a variant of the UNI Product Component of the NEBS supplied by means of the NBN Co Fibre Network.

6.1.2.1 UNI-V Supported Features

The UNI-V supports a limited set of IP-based telephony features. It is the responsibility of Customer to interface to the UNI-V with a soft switch, located beyond the NNI, and complete the delivery of these features with complementary feature support within the Customer Network.

The IP-based telephony features supported by the UNI-V are described in Table 15.

End User Feature	Supporting NBN Co Feature
Call Waiting	Supported by Call Hold, Flash Hook and Flash Recall
Calling Number Display	Supported by Calling Line Identification Presentation
Calling Number Display Blocking	Supported by Calling Line Identification Restriction
Message Wait Indicator: visual and audible	Supported by Message Wait Indicator (light on phone) and distinctive dial tone (stutter dial tone)
Hot Line	Supported by immediate Hot Line
Delayed Hot Line	Supported by Warmline

Table 15: UNI-V Supported Features

Customer may choose to provide other End User call handling features that are implemented in the Customer soft switch and/or CPE and do not require specific support by the UNI-V, including call barring and call forwarding.

6.1.2.1.1 UNI-V Configuration

The UNI-V must be further configured by Customer after the UNI-V has been activated by NBN Co. The configuration method for UNI-V uses DSL Forum Technical Report 069 (TR-069) protocol. TR-069 configuration requires Customer to configure the UNI-V via a configuration process as described by TR-104, downloaded to the NTD using a mechanism compliant with TR-069.

6.1.2.2 UNI-V Physical Port Characteristics

Each UNI-V is designed to exhibit the physical port characteristics described in Table 16.

Parameter	Specification
Maximum Loop Length	150 metres (300m loop) of 0.5mm diameter, Cat 3 cable
Loop Voltage	42 to 56VDC
Ring Voltages	≥50 Vrms
Ringer Equivalence	Up to 3 REN per UNI-V
Loop Current	≥18mA
Line voltage drop in event of NTD upgrade or power outage	Less than 1 minute

Table 16: UNI-V Physical Port Characteristics

6.1.2.2.1 Physical Interface

The internal NTD UNI-V line connection supports a miniature, 6-position socket as specified in ANSI/TIA 968 A 2002. The external NTD provides screw-down connections for each of the UNI-V ports. Section 6.3.2.1 provides details of the supported NTD types.

6.1.2.3 UNI-V Functional Attributes

6.1.2.3.1 Voice CODEC

The UNI-V supports the CODEC configuration described in Table 17.

Parameter	Value
CODEC	G.711 A-law[31]
Packetisation Rate	20msec
DTMF Tones	Selectable as either "In-Band" or "Out-Of-Band" (as per RFC2833)
Echo Cancellation	Support for G.168 Section 7 CPE must conform to AS/CA S002:2010 Appendix A for echo canceller/suppressor disable tones.

Table 17: UNI-V CODEC Description

6.1.2.3.2 Traffic Management and Identification

All traffic associated with the UNI-V is carried within the NBN Co Fibre Network using the TC-1 traffic class.

Upstream UNI-V traffic will be presented at egress from the NNI with S-PCP = 5 (TC-1). Customer must ensure that UNI-V service traffic appears at ingress to the NNI with S-PCP = 5 (TC-1).

The NBN Co Fibre Network will mark traffic generated by the UNI-V ATA in the upstream direction with the DSCP markings described in Table 18.

Traffic Type	DSCP Marking (Decimal)
SIP Signalling	40
RTP Media	41
Management and Operations	42

Table 18: UNI-V DSCP Markings (NNI Egress)

6.1.2.3.3 IPv6 Support

The UNI-V supports IPv4-based SIP services only. NBN Co currently intends to support IPv6-based SIP services in the future.

6.1.2.3.4 Layer 3 Connectivity

It is the responsibility of Customer to manage allocation of IP addresses and associated network parameters to the SIP user agent associated with each UNI-V. DHCP is used as the mechanism to manage address distribution.

---

[31] As per ITU-T G.711.

Customer must provide DHCP server infrastructure and assign the following parameters:

- IP Address (IPv4)
- Subnet Mask (Option 1)
- Default Router Address (IPv4) (Option 3)
- DNS server (required if a hostname is used for proxy server SIP URI) (Option 6)
- ACS Server

Within the NBN Co Fibre Network, DHCP Option 82 fields will be populated with the identifier of the AVC attached to a given UNI-V, using a format identical to that described in section 6.2.3.1.

6.1.2.3.5 Dial Plan

The *Telecommunications Numbering Plan 1997* is supported on the UNI-V including national, international, regional, emergency and free call numbers and short dial codes as used for IVR, preselect, override, etc.

6.1.2.3.6 Digit Tone Handling - In-Band DTMF Transmission

The UNI-V ATA supports in-band DTMF transmission across an IP network.

6.1.2.3.7 Digit Tone Handling - Out-of-Band DTMF Transmission

The UNI-V ATA supports out-of-band (as per RFC2833) DTMF transmission across an IP network.

6.1.2.3.8 Low-Speed Data, Fax and Modem Support

The G.711 codec will support transmission of low speed data including TTY, fax with rates up to 9.6 kbps and modems with rates up to 14.4 kbps. CPE must conform to AS/CA S002:2010 Appendix A for echo canceller/suppressor disable tones.

6.1.2.3.9 Ring Cadence

The ring cadence supported by each UNI-V is DR0, DR1, DR3, DR6, and DR7 as per AS/CA S002:2010.

6.1.2.3.10 Service Tone Characteristics

The service tones supported by each UNI-V are described in Table 19 below. For further detail, refer to AS/CA S002:2010 Appendix A.

Service Tone	Frequency/Nominal Approximate Level	Cadence
Dial tone	400Hz at -22.5dBm 425Hz at -22.5dBm 450Hz at -22.5dBm	Continuous for up to 12s
Ringing (ring-back) tone	400Hz at -22.5dBm 425Hz at -22.5dBm 450Hz at -22.5dBm	On-400ms, Off-200ms, On-400ms, Off-2000ms, repeated
Special Dial Tone (message waiting)	400Hz at -22.5dBm 425Hz at -22.5dBm 450Hz at -22.5dBm	On-100ms, Off-40ms, repeated for up 12s
Busy tone (Disconnect tone)	425Hz at -16dBm	On-375ms, Off-375ms, repeated for up to 60s
Call Waiting tone	425Hz at -16dBm	On-200ms, Off-200ms, On-200ms, Off-4400ms, repeated for up to 45s

Table 19: Service Tones

6.2 Access Virtual Circuit (AVC)

6.2.1 Overview

The AVC implements the C-VLAN component of an IEEE802.1ad Provider Bridge, as described in section 3 of this Product Technical Specification.

Customer may deliver multiple End User applications (such as voice and video) using a single AVC (using CoS to manage the capacity between applications).

The AVC is offered through three functional variants:

- Unicast, 1:1 AVC – required for unicast data applications using the UNI-D
- Unicast, N:1 AVC – required for unicast data applications using the UNI-V
- Multicast, N:1 AVC – required for multicast data applications using the UNI-D, referred to as Multicast AVC

NEBS supplied by means of the NBN Co Fibre Network supports all three variants. NEBS supplied by means of the NBN Co Wireless Network supports only the unicast, 1:1 variant.

6.2.2 AVC Scalability

The maximum number of AVCs that can be supported on a single UNI depends on the UNI type and operation as described in section 6.1.1.2.3.

AVCs are logically isolated from each other via the use of distinct S/C-VIDs, and are designed to be individually dimensioned by Customer from a set of selectable parameters according to the service needs of each End User. An AVC is designed to be scaled in capacity (through its bandwidth profile),

within the bounds of the product constructs and the physical limits of the underlying access network technology.

6.2.3 Access Loop Identification

Customer may optionally configure a unicast AVC to have information inserted into relevant upstream Layer 3 control packets, which may assist Customer to identify the individual logical circuit to upstream devices beyond the NNI network boundary.

This section describes the supported protocols and information that may be optionally inserted.

6.2.3.1 DHCP Option 82 Support

An AVC may be optionally configured to provide support for DHCP Option 82.

DHCP Option 82 is designed to allow for two fields to be set:

- Circuit-ID
- Remote-ID

NBN Co will insert DHCP Option 82 fields into upstream DHCP DISCOVER and REQUEST messages upon ingress to the AVC at the UNI-D. The fields should be set as follows:

- Circuit-ID – The Circuit-ID should be set to the following format: the first three bytes will signify the AVC product prefix and the next 12 bytes will be a unique string identifying the AVC. Concatenated together, these values will form the **AVC Service ID**. If End User Equipment attached to the AVC populates the Circuit-ID field, the NBN Co infrastructure will replace it with the AVC Service ID. The format for the AVC Service ID is illustrated in Figure 7 below.

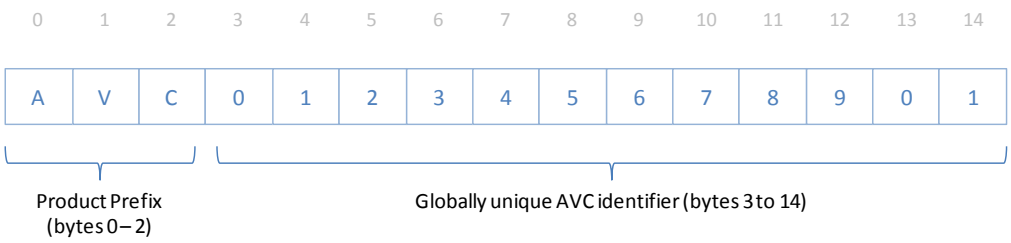

Figure 7: DHCP Option 82 Circuit-ID Field Format

- Remote-ID – The Remote-ID will not be populated. If End User Equipment attached to an AVC populates the Remote-ID field, the NBN Co Network will strip this field.

Customer must ensure that upstream DHCP DISCOVER and REQUEST messages comply with the BOOTP length guidelines contained within RFC1542 (section 2.1) before presentation at the UNI-D.

6.2.3.2 DHCPv6 Option 18/37 Support

An AVC may be optionally configured to provide support for DHCPv6 Option 18 (Interface-ID).

When the Access Loop Identification functionality is enabled, NBN Co will encapsulate all DHCPv6 messages received at the UNI-D in a DHCPv6 Relay Forward message, with Option 18 (Interface-ID) set to the AVC (as per RFC 3315).

The fields will be set as follows:

- Interface-ID – The Interface-ID will be set to the following format: the first three bytes will signify the AVC product prefix and the next 12 bytes will be a unique string identifying the AVC. Concatenated together, these values will form the **AVC Service ID**. If End User Equipment attached to the AVC populates the Interface-ID field, the NBN Co infrastructure will replace it with the AVC Service ID. The format for the AVC Service ID is illustrated in Figure 8 below.

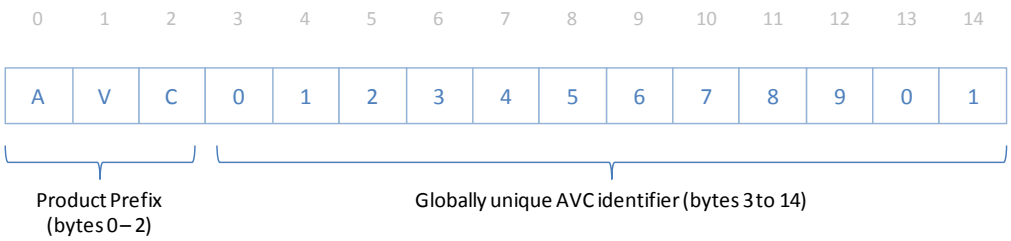

Figure 8: DHCPv6 Option 18 Interface-ID Field Format

Option 37 (Remote-ID) is not supported. The Remote-ID will not be populated in the DHCPv6 Relay Forward message.

If End User Equipment attached to an AVC sends a DHCPv6 Relay Forward message, the entire message will be encapsulated as an option (Option-20, Relay-Message) in the NBN DHCPv6 Relay Forward message; in this case, any DHCPv6 options attached by the End User Equipment, including Option 18 or Option 37, will be carried transparently in the encapsulated message.

6.2.3.3 PPPoE Intermediate Agent Support

An AVC may be optionally configured for PPPoE Intermediate Agent support.

The PPPoE Intermediate Agent support configuration allows for two fields to be set:

- Circuit-ID
- Remote-ID

NBN Co will insert PPPoE Intermediate Agent Option 82 fields into upstream PPP PADI messages upon ingress to the AVC at the UNI-D. The fields will be set as follows:

- Circuit-ID – The Circuit-ID will be set to the following format: the first three bytes will signify the AVC product prefix and the next 12 bytes will be a unique string identifying the AVC. Concatenated together, these values will form the AVC Service ID. If End User Equipment attached to the AVC populates the Circuit-ID field, the NBN Co Network will replace it with the AVC Service ID. The format for the AVC Service ID is illustrated in Figure 9 below.

Figure 9: PPPoE Intermediate Agent Circuit-ID Field Format

- Remote-ID – The Remote-ID will not be populated. If End User Equipment attached to an AVC populates the Remote-ID field, the NBN Co Network will strip this field.

6.3 Access Components

Access Components, for the purposes of this Product Technical Specification only comprise each instance of the UNI and AVC Product Components supplied by NBN Co to Customer to use as an input to a Customer Product or Downstream Product.

This may include:

- in relation to the NEBS supplied by means of the NBN Co Fibre Network, any one or more of the following: a single UNI-D, a UNI-D and UNI-V, each with a separate associated unicast AVC and including optionally, in relation to the UNI-D, a Multicast AVC
- in relation to the NEBS supplied by means of the NBN Co Wireless Network, a single UNI-D with an associated AVC

Each Access Component is delivered using two sets of attributes:

- **configuration attributes** – provided through Product Templates
- **service attributes** – provided through Product Order Forms for each AVC order

This section describes the Access Components in the context of configuration and service attributes.

6.3.1 Configuration Attributes

The following tables detail all AVC and UNI attributes which must be specified within a Product Template, for the delivery of the relevant Access Components.

Customer may construct its end-to-end service from a combination of these configuration attributes and service attributes selected in relation to each Ordered Product.

Certain settings required to interface to the NBN Co Network must be decided at time of On-boarding during the solution definition phase, and captured in a Product Template. These details cannot be tailored for each specific Ordered Product.

Product Templates apply to the Access Components only. Product Templates, combined with per-Ordered Product service attributes selected in a Product Order Form at time of order, are required for NBN Co to supply an Ordered Product.

6.3.1.1 UNI Configuration Attributes

The following set of configuration attributes are supported by the UNI. These parameters are captured during the solution definition phase, as part of the On-boarding process.

Component	Configuration Attribute	Configuration Attribute Options
UNI	UNI Type	UNI-D
		UNI-V (only available for NEBS supplied by means of the NBN Co Fibre Network)
	VLAN Mode	Default-Mapped (UNI-D only)[32]
		DSCP-Mapped
		Priority-Tagged (UNI-D only)
		Tagged (UNI-D only)

Table 20: UNI Configuration Attributes

6.3.1.2 AVC Configuration Attributes

The following set of configuration attributes are supported by the AVC (and Multicast AVC). These parameters are captured during the solution definition phase, as part of the On-boarding process.

Component	Configuration Attribute	Configuration Attribute Options
AVC	AVC Type	Unicast 1:1 (UNI-D only)
		Unicast N:1 (UNI-V only)
		Multicast N:1 (UNI-D for NEBS supplied by means of the NBN Co Fibre Network only)
	Supported bandwidth profiles	Refer sections 6.3.2.7 to 6.3.2.9

Table 21: AVC Configuration Attributes

6.3.2 Service Attributes

This section describes the service attributes Customer must select for each Access Component, at the time of ordering an Ordered Product. Note that the number and type of service components will be determined by the Product Template.

6.3.2.1 NTD Unit Type

Customer cannot directly order an NTD. The provision and operation of the NTD is the responsibility of NBN Co.

By default, in respect of a Premises at which NBN Co will supply the NEBS by means of the NBN Co Fibre Network, an internal NTD will be provided unless NBN Co determines that an external NTD is preferable in the circumstances or an End User indicates a preference for an external NTD during installation and agrees to any additional charges that may apply.

[32] Note the limitations on addressing mode and AVC traffic class combinations in Table 28 and Table 29.

NBN Co only provides a single type of NTD in relation to a Premises at which NBN Co will supply the NEBS by means of the NBN Co Wireless Network, as described in section 8.2.

Customer may order individual UNIs on an NTD in accordance with this Agreement.

6.3.2.2 Access Component Attributes

The following service attributes must be specified at time of order for each AVC (or Multicast AVC) and UNI Product Component:

Component	Service Attribute	Specification (Provided by Customer)
Access Service[33]	"Service Restoration SLA" (Service Fault rectification Service Level)	Standard (Default)
		Enhanced-12
		Enhanced-12 (24/7)
		Enhanced-8
		Enhanced-8 (24/7)
	Priority Assist (Downstream Priority Assistance Service)	No (Default)
		Yes
	Battery Backup Service[34]	Yes
		No

Table 22: Service Attributes for Access Service

6.3.2.3 UNI-V Service Attributes

The following service attributes must be specified at time of order for the UNI-V (for NEBS supplied by means of the NBN Co Fibre Network only):

Component	Service Attribute	Specification (Provided by Customer)
UNI-V	NTD UNI-V Port Number	0: Assigned by NBN Co (default)

Table 23: Service Attributes for UNI-V

[33] Refer to the Service Levels Schedule and the Product Description for the NBN Co Ethernet Bitstream Service for details of supported service options that are available only for the NEBS supplied by means of the NBN Co Fibre Network.

[34] Specifying Battery Backup Service preference will be optional during the OBB Transition Period. During this period, all orders submitted without specifying a Battery Backup Service preference will default to "Yes". After the transition period, all orders submitted without specifying a Battery Backup Service preference will be rejected.

6.3.2.4 UNI-D Service Attributes

The following service attributes must be specified at time of order for the UNI-D:

Component	Service Attribute	Specification (Provided by Customer)
UNI-D	NTD UNI-D Port Number	0: Assigned by NBN Co (default) 1 – 4: Request Specific UNI-D Port on NTD (if available)
	Physical Interface	AUTO (Speed)/AUTO (Duplex)
		100Mbps/AUTO (Duplex)

Table 24: Service Attributes for UNI-D

6.3.2.5 Unicast AVC Service Attributes

The following service attributes must be specified at time of order for each unicast 1:1 AVC:

Component	Service Attribute	Specification (Provided by Customer)
AVC	CVC ID	CVC ID
	C-VID at NNI (1:1 AVC only)	0 – 4000[35]
	C-VID at UNI-D[36] (1:1 AVC only)	2 – 4004 (NEBS supplied by means of the NBN Co Fibre Network) 2 – 4001 (NEBS supplied by means of the NBN Co Wireless Network)
	Bandwidth Profile	Specified from list of supported unicast AVC bandwidth profiles in Table 28
	Access Loop Identification Active	TRUE/FALSE

Table 25: Service Attributes for Unicast 1:1 AVC

[35] The value of zero indicates that NBN Co will select the C-VID, and does not indicate that a C-VID of zero may be used.

[36] Required only for UNI-D mode configured in Tagged mode.

The following service attributes must be specified at time of order for each unicast N:1 AVC:

Component	Service Attribute	Specification (Provided by Customer)
AVC	CVC ID	CVC ID

Table 26: Service Attributes for Unicast N:1 AVC

6.3.2.6 Multicast AVC Service Attributes

The following service attributes must be specified at time of order for each multicast AVC:

Component	Service Attribute	Specification (Provided by Customer)
AVC	Multicast Domain ID	Multicast Domain ID
	Bandwidth Profile	Specified from list of supported Multicast AVC bandwidth profiles in Table 30

Table 27: Service Attributes for Multicast AVC

6.3.2.7 Supported Unicast 1:1 AVC Bandwidth Profiles

This table shows the valid combinations that may be used to populate the bandwidth profile (upstream and downstream) for a unicast 1:1 AVC. The bandwidth profile to be used for a specific order for an Access Component will be provided at time of order, and will be chosen as per the End User's service requirements.

Profile Number	AVC_TC-4 (DOWN-STREAM) (Mbps)	AVC_TC-4 (UPSTREAM) (Mbps)	AVC_TC-2 (UPSTREAM, DOWNSTREAM) (Mbps)	AVC_TC-1 (UPSTREAM, DOWNSTREAM) (Mbps)	UNI Interface	UNI-D Supported Interface Mode[37]	
						Default-Mapped (Traffic Class)	DSCP-Mapped, Priority-Tagged and Tagged
1	12	1	0	0	UNI-D	4	Y
2	12	1	0	0.15	UNI-D	1	Y
3	12	1	0	0.3	UNI-D	1	Y
4	25	5	0	0	UNI-D	4	Y

[37] Certain AVC bandwidth profiles have dependencies on the UNI-D operating mode.

Profile Number	AVC_TC-4 (DOWN-STREAM) (Mbps)	AVC_TC-4 (UPSTREAM) (Mbps)	AVC_TC-2 (UPSTREAM, DOWNSTREAM) (Mbps)	AVC_TC-1 (UPSTREAM, DOWNSTREAM) (Mbps)	UNI Interface	UNI-D Supported Interface Mode[37]	
						Default-Mapped (Traffic Class)	DSCP-Mapped, Priority-Tagged and Tagged
5	25	5	0	0.15	UNI-D	-	Y
6	25	5	0	0.3	UNI-D	-	Y
7	25	5	0	0.5	UNI-D	1	Y
8	25	10	0	0	UNI-D	4	Y
9	25	10	0	0.15	UNI-D	-	Y
10	25	10	0	0.3	UNI-D	-	Y
11	25	10	0	0.5	UNI-D	-	Y
12	25	10	0	1	UNI-D	1	Y
13	25	10	5	0	UNI-D	2	Y
14	25	10	5	0.15	UNI-D	-	Y
15	25	10	5	0.3	UNI-D	-	Y
16	25	10	5	0.5	UNI-D	-	Y
17	50	20	0	0	UNI-D	4	Y
18	50	20	0	0.15	UNI-D	-	Y
19	50	20	0	0.3	UNI-D	-	Y
20	50	20	0	0.5	UNI-D	-	Y
21	50	20	0	1	UNI-D	-	Y
22	50	20	0	2	UNI-D	1	Y
23	50	20	5	0	UNI-D	-	Y
24	50	20	5	0.15	UNI-D	-	Y
25	50	20	5	0.3	UNI-D	-	Y
26	50	20	5	0.5	UNI-D	-	Y
27	50	20	5	1	UNI-D	-	Y
28	50	20	5	2	UNI-D	-	Y
29	50	20	10	0	UNI-D	2	Y
30	50	20	10	0.15	UNI-D	-	Y

Profile Number	AVC_TC-4 (DOWN-STREAM) (Mbps)	AVC_TC-4 (UPSTREAM) (Mbps)	AVC_TC-2 (UPSTREAM, DOWNSTREAM) (Mbps)	AVC_TC-1 (UPSTREAM, DOWNSTREAM) (Mbps)	UNI Interface	UNI-D Supported Interface Mode[37]	
						Default-Mapped (Traffic Class)	DSCP-Mapped, Priority-Tagged and Tagged
31	50	20	10	0.3	UNI-D	-	Y
32	50	20	10	0.5	UNI-D	-	Y
33	50	20	10	1	UNI-D	-	Y
34	50	20	10	2	UNI-D	-	Y
35	100	40	0	0	UNI-D	4	Y
36	100	40	0	0.15	UNI-D	-	Y
37	100	40	0	0.3	UNI-D	-	Y
38	100	40	0	0.5	UNI-D	-	Y
39	100	40	0	1	UNI-D	-	Y
40	100	40	0	2	UNI-D	-	Y
41	100	40	0	5	UNI-D	1	Y
42	100	40	5	0	UNI-D	-	Y
43	100	40	5	0.15	UNI-D	-	Y
44	100	40	5	0.3	UNI-D	-	Y
45	100	40	5	0.5	UNI-D	-	Y
46	100	40	5	1	UNI-D	-	Y
47	100	40	5	2	UNI-D	-	Y
48	100	40	5	5	UNI-D	-	Y
49	100	40	10	0	UNI-D	-	Y
50	100	40	10	0.15	UNI-D	-	Y
51	100	40	10	0.3	UNI-D	-	Y
52	100	40	10	0.5	UNI-D	-	Y
53	100	40	10	1	UNI-D	-	Y
54	100	40	10	2	UNI-D	-	Y
55	100	40	10	5	UNI-D	-	Y
56	100	40	20	0	UNI-D	2	Y

Profile Number	AVC_TC-4 (DOWN-STREAM) (Mbps)	AVC_TC-4 (UPSTREAM) (Mbps)	AVC_TC-2 (UPSTREAM, DOWNSTREAM) (Mbps)	AVC_TC-1 (UPSTREAM, DOWNSTREAM) (Mbps)	UNI Interface	UNI-D Supported Interface Mode[37]	
						Default-Mapped (Traffic Class)	DSCP-Mapped, Priority-Tagged and Tagged
57	100	40	20	0.15	UNI-D	-	Y
58	100	40	20	0.3	UNI-D	-	Y
59	100	40	20	0.5	UNI-D	-	Y
60	100	40	20	1	UNI-D	-	Y
61	100	40	20	2	UNI-D	-	Y
62	250	100	0	0	UNI-D	4	Y
63	250	100	0	0.15	UNI-D	-	Y
64	250	100	0	0.3	UNI-D	-	Y
65	250	100	0	0.5	UNI-D	-	Y
66	250	100	0	1	UNI-D	-	Y
67	250	100	0	2	UNI-D	-	Y
68	250	100	0	5	UNI-D	-	Y
69	250	100	5	0	UNI-D	-	Y
70	250	100	5	0.15	UNI-D	-	Y
71	250	100	5	0.3	UNI-D	-	Y
72	250	100	5	0.5	UNI-D	-	Y
73	250	100	5	1	UNI-D	-	Y
74	250	100	5	2	UNI-D	-	Y
75	250	100	5	5	UNI-D	-	Y
76	250	100	10	0	UNI-D	-	Y
77	250	100	10	0.15	UNI-D	-	Y
78	250	100	10	0.3	UNI-D	-	Y
79	250	100	10	0.5	UNI-D	-	Y
80	250	100	10	1	UNI-D	-	Y
81	250	100	10	2	UNI-D	-	Y
82	250	100	10	5	UNI-D	-	Y

Profile Number	AVC_TC-4 (DOWN-STREAM) (Mbps)	AVC_TC-4 (UPSTREAM) (Mbps)	AVC_TC-2 (UPSTREAM, DOWNSTREAM) (Mbps)	AVC_TC-1 (UPSTREAM, DOWNSTREAM) (Mbps)	UNI Interface	UNI-D Supported Interface Mode[37]	
						Default-Mapped (Traffic Class)	DSCP-Mapped, Priority-Tagged and Tagged
83	250	100	20	0	UNI-D	-	Y
84	250	100	20	0.15	UNI-D	-	Y
85	250	100	20	0.3	UNI-D	-	Y
86	250	100	20	0.5	UNI-D	-	Y
87	250	100	20	1	UNI-D	-	Y
88	250	100	20	2	UNI-D	-	Y
89	250	100	20	5	UNI-D	-	Y
90	250	100	30	0	UNI-D	2	Y
91	250	100	30	0.15	UNI-D	-	Y
92	250	100	30	0.3	UNI-D	-	Y
93	250	100	30	0.5	UNI-D	-	Y
94	250	100	30	1	UNI-D	-	Y
95	250	100	30	2	UNI-D	-	Y
96	250	100	30	5	UNI-D	-	Y
97	250	100	40	0	UNI-D	2	Y
98	250	100	40	0.15	UNI-D	-	Y
99	250	100	40	0.3	UNI-D	-	Y
100	250	100	40	0.5	UNI-D	-	Y
101	250	100	40	1	UNI-D	-	Y
102	250	100	40	2	UNI-D	-	Y
103	250	100	40	5	UNI-D	-	Y
104	500	200	0	0	UNI-D	4	Y
105	500	200	0	0.15	UNI-D	-	Y
106	500	200	0	0.3	UNI-D	-	Y
107	500	200	0	0.5	UNI-D	-	Y
108	500	200	0	1	UNI-D	-	Y

Profile Number	AVC_TC-4 (DOWN-STREAM) (Mbps)	AVC_TC-4 (UPSTREAM) (Mbps)	AVC_TC-2 (UPSTREAM, DOWNSTREAM) (Mbps)	AVC_TC-1 (UPSTREAM, DOWNSTREAM) (Mbps)	UNI Interface	UNI-D Supported Interface Mode[37]	
						Default-Mapped (Traffic Class)	DSCP-Mapped, Priority-Tagged and Tagged
109	500	200	0	2	UNI-D	-	Y
110	500	200	0	5	UNI-D	-	Y
111	500	200	5	0	UNI-D	-	Y
112	500	200	5	0.15	UNI-D	-	Y
113	500	200	5	0.3	UNI-D	-	Y
114	500	200	5	0.5	UNI-D	-	Y
115	500	200	5	1	UNI-D	-	Y
116	500	200	5	2	UNI-D	-	Y
117	500	200	5	5	UNI-D	-	Y
118	500	200	10	0	UNI-D	-	Y
119	500	200	10	0.15	UNI-D	-	Y
120	500	200	10	0.3	UNI-D	-	Y
121	500	200	10	0.5	UNI-D	-	Y
122	500	200	10	1	UNI-D	-	Y
123	500	200	10	2	UNI-D	-	Y
124	500	200	10	5	UNI-D	-	Y
125	500	200	20	0	UNI-D	-	Y
126	500	200	20	0.15	UNI-D	-	Y
127	500	200	20	0.3	UNI-D	-	Y
128	500	200	20	0.5	UNI-D	-	Y
129	500	200	20	1	UNI-D	-	Y
130	500	200	20	2	UNI-D	-	Y
131	500	200	20	5	UNI-D	-	Y
132	500	200	30	0	UNI-D	-	Y
133	500	200	30	0.15	UNI-D	-	Y
134	500	200	30	0.3	UNI-D	-	Y

Profile Number	AVC_TC-4 (DOWN-STREAM) (Mbps)	AVC_TC-4 (UPSTREAM) (Mbps)	AVC_TC-2 (UPSTREAM, DOWNSTREAM) (Mbps)	AVC_TC-1 (UPSTREAM, DOWNSTREAM) (Mbps)	UNI Interface	UNI-D Supported Interface Mode[37]	
						Default-Mapped (Traffic Class)	DSCP-Mapped, Priority-Tagged and Tagged
135	500	200	30	0.5	UNI-D	-	Y
136	500	200	30	1	UNI-D	-	Y
137	500	200	30	2	UNI-D	-	Y
138	500	200	30	5	UNI-D	-	Y
139	500	200	40	0	UNI-D	-	Y
140	500	200	40	0.15	UNI-D	-	Y
141	500	200	40	0.3	UNI-D	-	Y
142	500	200	40	0.5	UNI-D	-	Y
143	500	200	40	1	UNI-D	-	Y
144	500	200	40	2	UNI-D	-	Y
145	500	200	40	5	UNI-D	-	Y
146	1000	400	0	0	UNI-D	4	Y
147	1000	400	0	0.15	UNI-D	-	Y
148	1000	400	0	0.3	UNI-D	-	Y
149	1000	400	0	0.5	UNI-D	-	Y
150	1000	400	0	1	UNI-D	-	Y
151	1000	400	0	2	UNI-D	-	Y
152	1000	400	0	5	UNI-D	-	Y
153	1000	400	5	0	UNI-D	-	Y
154	1000	400	5	0.15	UNI-D	-	Y
155	1000	400	5	0.3	UNI-D	-	Y
156	1000	400	5	0.5	UNI-D	-	Y
157	1000	400	5	1	UNI-D	-	Y
158	1000	400	5	2	UNI-D	-	Y
159	1000	400	5	5	UNI-D	-	Y
160	1000	400	10	0	UNI-D	-	Y

Profile Number	AVC_TC-4 (DOWN-STREAM) (Mbps)	AVC_TC-4 (UPSTREAM) (Mbps)	AVC_TC-2 (UPSTREAM, DOWNSTREAM) (Mbps)	AVC_TC-1 (UPSTREAM, DOWNSTREAM) (Mbps)	UNI Interface	UNI-D Supported Interface Mode[37]	
						Default-Mapped (Traffic Class)	DSCP-Mapped, Priority-Tagged and Tagged
161	1000	400	10	0.15	UNI-D	-	Y
162	1000	400	10	0.3	UNI-D	-	Y
163	1000	400	10	0.5	UNI-D	-	Y
164	1000	400	10	1	UNI-D	-	Y
165	1000	400	10	2	UNI-D	-	Y
166	1000	400	10	5	UNI-D	-	Y
167	1000	400	20	0	UNI-D	-	Y
168	1000	400	20	0.15	UNI-D	-	Y
169	1000	400	20	0.3	UNI-D	-	Y
170	1000	400	20	0.5	UNI-D	-	Y
171	1000	400	20	1	UNI-D	-	Y
172	1000	400	20	2	UNI-D	-	Y
173	1000	400	20	5	UNI-D	-	Y
174	1000	400	30	0	UNI-D	-	Y
175	1000	400	30	0.15	UNI-D	-	Y
176	1000	400	30	0.3	UNI-D	-	Y
177	1000	400	30	0.5	UNI-D	-	Y
178	1000	400	30	1	UNI-D	-	Y
179	1000	400	30	2	UNI-D	-	Y
180	1000	400	30	5	UNI-D	-	Y
180	1000	400	40	0	UNI-D	-	Y
181	1000	400	40	0.15	UNI-D	-	Y
182	1000	400	40	0.3	UNI-D	-	Y
183	1000	400	40	0.5	UNI-D	-	Y
184	1000	400	40	1	UNI-D	-	Y
185	1000	400	40	2	UNI-D	-	Y

Profile Number	AVC_TC-4 (DOWN-STREAM) (Mbps)	AVC_TC-4 (UPSTREAM) (Mbps)	AVC_TC-2 (UPSTREAM, DOWNSTREAM) (Mbps)	AVC_TC-1 (UPSTREAM, DOWNSTREAM) (Mbps)	UNI Interface	UNI-D Supported Interface Mode[37]	
						Default-Mapped (Traffic Class)	DSCP-Mapped, Priority-Tagged and Tagged
186	1000	400	40	5	UNI-D	-	Y

Table 28: Supported Unicast 1:1 AVC Bandwidth Profiles

Notes:

- NBN Co may limit the availability of bandwidth profiles with TC-1 capacities greater than 1 Mbps to certain CSAs where NBN Co does not, or considers it is likely to not, have sufficient capacity to provide all requested TC-1 capacity. Customer must conduct a Site Qualification Enquiry which will indicate the availability of bandwidth profiles for TC-1 capacities greater than 1 Mbps in relation to each Premises.
- NBN Co may limit the availability of bandwidth profiles with TC-2 capacities greater than 10 Mbps to certain CSAs where NBN Co does not, or considers it is likely to not, have sufficient capacity to provide all requested TC-2 capacity. Customer must conduct a Site Qualification Enquiry which will indicate the availability of bandwidth profiles for TC-2 in relation to each Premises.
- NBN Co may limit the availability of bandwidth profiles with TC-4 capacities greater than 100 Mbps to certain CSAs where NBN Co does not, or considers it is likely to not, have sufficient capacity to provide all requested TC-4 capacity. Customer must conduct a Site Qualification Enquiry which will indicate the availability of Bandwidth Profiles for TC-4 capacities greater than 100 Mbps in relation to each Premises.
- To be read subject to sections 4.3.1 and 8.1.2.

Only a subset of bandwidth profiles is available in relation to the NEBS supplied by means of the NBN Co Wireless Network and additional restrictions may apply to the supply of certain of those bandwidth profiles.

6.3.2.8 Supported Unicast N:1 AVC Bandwidth Profiles

Table 29 shows the valid combinations that may be used to populate the bandwidth profile (upstream and downstream) for a unicast N:1 AVC, as required for UNI-V operation. Note that the unicast N:1 AVC bandwidth profile is automatically set by NBN Co as per the single profile listed in Table 29.

Profile Number	AVC_TC-4 (DOWN-STREAM) (Mbps)	AVC_TC-4 (UPSTREAM) (Mbps)	AVC_TC-1 (UPSTREAM, DOWNSTREAM) (Mbps)	UNI Interface	UNI-D Supported Interface Mode
1	0	0	0.15	UNI-V	N/A

Table 29: Supported Unicast N:1 AVC Bandwidth Profiles

6.3.2.9 Supported Multicast AVC Bandwidth Profiles

Table 30 shows the valid combinations that may be used to populate the bandwidth profile (downstream only) for a Multicast AVC. The bandwidth profile to be used for a Multicast AVC must be selected by Customer at the time of order based on the End User's service requirements.

Profile Number	AVC_TC-MC (Mbps)	UNI Interface	UNI-D Supported Interface Mode			
			Default-Mapped	DSCP-Mapped,	Priority-Tagged	Tagged
1	5	UNI-D	Y	Y	N	N
2	20	UNI-D	Y	Y	N	N
3	30	UNI-D	Y	Y	N	N
4	40	UNI-D	Y	Y	N	N
5	50	UNI-D	Y	Y	N	N

Table 30: Supported Multicast AVC Bandwidth Profiles

A Multicast AVC operates in the downstream direction only, and can only be configured with the TC-MC CIR (multicast) capacities shown.

6.4 Connectivity Virtual Circuit (CVC)

This section describes the technical interface and operational requirements of the CVC.

6.4.1 Overview

The CVC implements the S-VLAN component of an IEEE802.1ad Provider Bridge. This is an Ethernet virtual circuit that provides connectivity between an NNI and CSA. It is dimensioned with a specific, configured amount of bandwidth capacity to deliver a higher-layer service (or number of services) to a range of AVCs within a particular CSA.

The CVC must be configured as one of the following:

- 1:1 VLAN, for 1:1 AVC unicast services delivered using the UNI-D interface
- N:1 VLAN, for N:1 AVC unicast services delivered using the UNI-V interface
- Multicast Domain, for Multicast AVC services delivered through the UNI-D interface

The NNI, and all CVCs delivered through it, are specific to Customer. It is possible that Customer may have multiple CVCs within a CSA delivered using a number of NNI.

Customer may request to cancel a CVC. A CVC cancellation can only proceed once all member AVCs have been cancelled.

6.4.2 CVC Scalability

CVCs are isolated from each other on an NNI via the use of distinct S-VIDs and can each be individually dimensioned according to the service needs of each CSA and each AVC contained within the CVC. CVCs using different service modes (including the Multicast Domain) are able to co-exist on the same NNI.

Customer should consider scalability in conjunction with contention. Customer may control End User experience through contention applied by dimensioning of capacity between the AVC and CVC.

6.4.2.1 1:1 Unicast CVC Scalability

A single 1:1 unicast CVC can support up to 4000 1:1 unicast AVCs, and is able to deliver AVCs to any UNI within a single CSA. Each of the 4000 1:1 unicast AVCs is addressed using a single, unique C-VID, locally significant to the CVC. The number of CVCs that Customer may purchase in relation to a given CSA is limited only by the NNI resources that Customer has purchased for that CSA.

Note that where Customer requires access to more than 4000 AVCs in a given CSA, it is necessary to utilise more than one CVC.

6.4.2.2 N:1 Unicast CVC Scalability

When operating in N:1 mode there is no restriction based on address space limitations on the number of N:1 unicast AVCs accessible from the NNI that can be addressed through a single N:1 unicast CVC.

6.4.2.3 Multicast Domain Scalability

There is no restriction on the number of Multicast AVCs within a CSA that can be addressed through a single Multicast Domain and are accessible from the NNI.

6.4.3 CVC Interfacing

Each CVC is directly accessed by Customer at the NNI. The VLAN tagging options for interfacing to the CVC at the NNI are described in section 3.

The CVC S-VID is designed to be validated at ingress to the NNI. Any traffic that does not comply with this tagging structure, or contains S-VID settings that are not agreed values, will be discarded at ingress to the NNI.

6.4.4 CVC Congestion Management

Customer should control AVC:CVC contention for the purpose of managing service utilisation. In the event of AVC:CVC congestion within unicast services, the NBN Co Network will discard traffic in accordance with section 4 of this Product Technical Specification.

6.4.5 CVC Service Attributes

There is no Product Template required for a CVC. Table 31 describes the set of service attributes which are generic to all CVC variants.

Component	Attributes	Attribute Description	Selectable Options
End-Point Identification	NNI Group identification[38]	Identification of the NNI that the CVC is to be terminated on.	NNI Group identification (Existing)
	B-END CSA	Identification of the CSA that the CVC is terminated on.	CSA identification
S-TAG Mapping	S-TAG (NNI)	Customer may choose a locally-significant S-TAG at the NNI. Optional parameter. If set to zero, NBN Co will assign the next available value.	Requested S-TAG (0 for NBN Co-supplied S-TAG) Default = 0 S-TAG: (1 – 4000)

Table 31: Generic CVC Service Attributes

6.4.5.1 Unicast 1:1 CVC

Each unicast 1:1 CVC order must specify each of the service attributes listed in Table 32 below, in addition to those detailed in Table 31.

Component	Attributes	Attribute Description	Selectable Options
Bandwidth profile	Bandwidth profile	CVC_TC-1_CIR (upstream and downstream)	Refer Table 36
		CVC_TC-2_CIR (upstream and downstream)	Refer Table 37
		CVC_TC-4_CIR (upstream and downstream)	Refer Table 38

Table 32: 1:1 Unicast CVC Additional Service Attributes

6.4.5.2 Unicast N:1 CVC

Each unicast N:1 CVC order must specify each of the service attributes listed in Table 33 below, in addition to those detailed in Table 31.

Component	Attributes	Attribute Description	Selectable Options
Bandwidth profile	Bandwidth profile	CVC_TC-1_CIR (upstream and downstream)	Refer Table 36

[38] Refer to section 6.5 of this Product Technical Specification.

Table 33: N:1 Unicast CVC Additional Service Attributes

6.4.5.3 Multicast Domain

Each Multicast Domain order must specify each of the service attributes listed in Table 34 below, in addition to those detailed in Table 31.

Component	Attributes	Attribute Description	Selectable options
Bandwidth Profile	Bandwidth Profile	CVC_TC-MC_CIR (downstream)	Refer Table 39
Multicast Options	Media Stream List	Details of Media Streams carried by the Multicast Domain.	Refer section 6.4.6
	IGMP Report Source Address	Source address inserted by NBN Co for IGMP report messages sent upstream on the Multicast Domain.	IP Address Default = 49.0.15.254

Table 34: Multicast Domain Additional Service Attributes

6.4.6 Multicast Domain Media Stream Attributes

The following information is required to capture the characteristics of each Media Stream to be carried within the Multicast Domain.

Identifier	Multicast Group IP Address	Peak Bandwidth (Mbps)
<TEXT>	IP Address	Value : 2.5 - 20
<TEXT>	IP Address	Value : 2.5 - 20
...	...	...
<TEXT>	IP Address	Value : 2.5 - 20

Table 35: Media Stream List Description Table (Multicast Domain)

The <TEXT> field is provided to allow Customer to reference each Media Stream using a meaningful name, and has a limit of 40 characters.

Customer must be aware of transition periods when modifying certain attributes associated with the Multicast Domain or Media Stream as described in the Service Levels Schedule and the NBN Co Operations Manual. As modification may occur progressively over geographic areas Customer will need to operate upstream components of an end-to-end service (in the Customer Network) with a mixture of "before" and "after" configurations until the modification is completed.

6.4.7 Supported CVC Bandwidth Profiles

6.4.7.1 Unicast 1:1 and N:1 CVC Bandwidth Profiles

The bandwidth profile for a unicast CVC may be constructed by independently selecting the TC-1 and TC-4 capacities, from the following tables.

Profile Number	CVC_TC-1 (Mbps)
1	0
2	5
3	10
4	20
5	50
6	100
7	150
8	200
9	250
10	300
11	400
12	500

Table 36: Unicast CVC TC-1 Bandwidth Profile Capacities[39]

Profile Number	CVC_TC-2 (Mbps)
1	0
2	50
3	100
4	150
5	200
6	250

[39] Available for Unicast CVC services configured as N:1 or 1:1.

7	300
8	400
9	500
10	600
11	700
12	800
13	900
14	1000

Table 37: Unicast CVC TC-2 Bandwidth Profile Capacities[40]

Profile Number	CVC_TC-4 (Mbps)
1	0
2	100
3	150
4	200
5	250
6	300
7	400
8	500
9	600
10	700
11	800
12	900
13	1000
14	1100
15	1200
16	1300
17	1400

[40] Available for Unicast CVC services configured as 1:1 only..

Profile Number	CVC_TC-4 (Mbps)
18	1500
19	1600
20	1700
21	1800
22	1900
23	2000
24	3000
25	4000
26	5000
27	6000
28	7000
29	8000
30	9000
31	10,000

Table 38: Unicast CVC TC-4 Bandwidth Profile Capacities[41]

6.4.7.2 Multicast Domain Bandwidth Profiles

The bandwidth profile for a Multicast Domain may be constructed by selecting the TC-MC capacity from Table 39.

Profile Number	CVC_TC-MC (Mbps)
1	100
2	200
3	300
4	400
5	500
6	600
7	700
8	800
9	900

[41] Available for Unicast CVC services configured as 1:1 only.

10	1000

Table 39: Multicast Domain TC-MC Bandwidth Profile Capacities

Customer must select a bandwidth profile for each Multicast Domain taking into account the aggregated peak bandwidth requirements of each of the Media Streams in the Multicast Domain as described in section 5.6.1.

6.5 Network-Network Interface (NNI)

The NNI defines the interface through which Customer accesses CVC instances.

An NNI Bearer is configured as a member of an NNI Group using IEEE802.1ax Link Aggregation (LACP enabled) within the EFS.

6.5.1 NNI Group

The NNI Group has the following attributes:

- Location
- Interface Rate
- Redundancy Mode
- Set of NNI Bearers
- Layer 2 Functional Characteristics

6.5.1.1 NNI Group Location

The location of the NNI Group must be specified at time of NNI Group creation.

In order to change the location of an NNI Group (i.e. re-locate NNI Bearers to a different location), it is necessary to purchase a new NNI Group in the intended location, and transition existing AVCs and CVCs from the old NNI Group. Once completed, the previous NNI Group may be cancelled.

6.5.1.2 NNI Group Interface Rate

A new NNI Group will be configured with a group interface rate that determines the interface rate of each NNI Bearer within the NNI Group. The following group interface rates are supported:

- 1Gbps
- 10Gbps

The group interface rate is set through the selection of the first NNI Bearer (Single Chassis mode), or pair of NNI Bearers (Diverse Chassis mode) at the time the NNI Group is created (each mode is described in section 6.5.1.3).

The group interface rate is fixed per NNI Group and will restrict the type of NNI Bearer that can be added to the NNI Group. For example, if the NNI Group is created with an initial NNI Bearer operating at 1Gbps, then any further NNI Bearers added to this group must also have an interface rate of 1Gbps.

In order to change the group interface rate of an NNI Group (i.e. change all 1Gbps NNI Bearers to 10Gbps), it is necessary to purchase a new NNI Group in the intended group interface rate and

associated NNI Bearers, and transition existing AVCs and CVCs from the old NNI Group. Once completed, the previous NNI Group may be cancelled by Customer.

6.5.1.3 NNI Group Redundancy Mode

The NNI Group must be configured in one of the following redundancy modes:

- **Single Chassis** (where all NNI Bearers are connected to the same EFS chassis)
- **Diverse Chassis** (where NNI Bearers are connected across a pair of EFS chassis)

6.5.1.3.1 Single Chassis Redundancy Mode

When an NNI Group is configured in Single Chassis mode, all NNI Bearers of the NNI Group will be provisioned on the same EFS chassis.

These NNI Bearers will operate in an N:1 protection mode, meaning that if any NNI Bearer within the NNI Group fails, the NNI Group will continue to operate at an aggregate capacity that is reduced by the capacity of the failed NNI Bearer.

6.5.1.3.2 Diverse Chassis Redundancy Mode

When an NNI Group is configured in Diverse Chassis mode, half of the NNI Bearers of the NNI Group will be provisioned on one EFS (working) chassis, and the other half will be provisioned on a second EFS (protect) chassis.

The NNI Group will operate in a 1:1 protection mode, meaning that if any NNI Bearer on the working EFS fails, traffic will be re-directed to the NNI Bearers on the protect EFS chassis.

6.5.1.3.3 Redundancy Mode Modification

The redundancy mode is configured per NNI Group at the time that the NNI Group is ordered, and cannot be modified once activated.

In order to change the redundancy mode of an NNI Group, Customer must purchase a new NNI Group in the intended redundancy mode and transition existing AVCs and CVCs from the old NNI Group. Once completed, the previous NNI Group may be cancelled.

6.5.1.4 Set of NNI Bearers

An NNI Group can support up to 8 NNI Bearers[42] . All NNI Bearers within an NNI Group must be consistent with the group interface rate for that NNI Group[43] (i.e. 1Gbps, or 10Gbps). The following activities may be performed on an NNI Group, with respect to the set of NNI Bearers:

- establish a new NNI Group through ordering at least one NNI Bearer (Single Chassis mode) or at least one pair of NNI Bearers (Diverse Chassis mode)
- modify an existing NNI Group through adding/removing NNI Bearer(s)
- cancel an existing NNI Group – all underlying NNI Bearers will be automatically cancelled

---

[42] Note that the addition of NNI Bearers to an NNI Group may result in the degradation of aggregate NNI Group link efficiency, as a result of IEEE802.3ad frame distribution.

[43] Optical characteristics may vary, providing the interface rate is consistent.

For NNI Groups configured as Single Chassis, NNI Bearers may be ordered as single interfaces.

For NNI Groups configured as Diverse Chassis, NNI Bearers must be ordered in pairs, with each NNI Bearer of each pair provisioned on different EFS.

For NNI Groups comprising 1Gbps Ethernet interfaces, NBN Co intends to use reasonable endeavours to provide the ability to seamlessly scale an NNI Group up to four NNI Bearers. Beyond four NNI Bearers, NBN Co will schedule an Outage with Customer unless NBN Co notifies Customer that an Outage is not necessary.

For NNI Groups comprising 10Gbps Ethernet interfaces, NBN Co intends to schedule an Outage with Customer in order to augment the NNI Group with additional NNI Bearers unless NBN Co notifies Customer that an Outage is not necessary.

6.5.1.5 LACP Peering

The determination of the working/protect status of the links within an NNI Group is based only on whether or not the NNI is able to connect to an LACP partner on the link. It cannot be influenced by LACP signalling (IN_SYNC/OUT_OF_SYNC messages) from Customer Equipment. Only loss of LACP connectivity between the NNI and Customer Equipment (as a result of a fibre break or interface failure for example), will prevent a link from being selected for working status.

6.5.1.6 Layer 2 Functional Characteristics

6.5.1.6.1 TPID Setting

The NNI Group must be configured with an S-TPID that is common across all NNI Bearers within the NNI Group. This must be selected by Customer in the NNI Product Order Form at time of order. S-TPIDs are described in section 3.1.2. Allowable settings are as follows:

- 0x88A8 (default); and
- 0x8100.

6.5.1.6.2 CVC Support

An NNI Group can support up to 4,000 CVCs in aggregate, including any mix of CVC types and Multicast Domains.

Customer is not permitted to over-book CVC capacity within an NNI Group.

6.5.1.6.3 Customer Network Restrictions

All service frames exiting the NNI (i.e. from the NBN Co Network to the Customer Network through the NNI) must traverse an IP device before being injected back into the NBN Co Network. This is necessary to avoid CPE MAC addresses from appearing as source addresses on traffic ingress to the NNI. This operating restriction must be observed by Customer even if service frames are being switched between VLANs or forwarded via other service provider networks.

6.5.1.6.4 Layer 2 Frame Forwarding

The NNI implements forwarding of service frames as detailed in Table 40, providing all CVC VLAN tag conditions are met.

Destination MAC Address	Application	Default Behaviour	Optional Configurable Behaviour
01-80-C2-00-00-00	Bridge Group Address	Discard	None
01-80-C2-00-00-01	IEEE Std 802.3 PAUSE	Discard	None
01-80-C2-00-00-02	LACP/LAMP	Peer[44]	None
	Link OAM	Discard	None
01-80-C2-00-00-03	IEEE Std. 802.1X PAE address	Discard	None
01-80-C2-00-00-04 - 01-80-C2-00-00-0F	Reserved	Discard	None
01-80-C2-00-00-10	All LANs Bridge Management Group Address	Discard	None
01-80-C2-00-00-20	GMRP	Discard	None
01-80-C2-00-00-21	GVRP	Discard	None
01-80-C2-00-00-22 - 01-80-C2-00-00-2F	Reserved GARP Application addresses	Discard	None
01-80-C2-00-00-3X	CFM	Tunnel[45]	None

Table 40: NNI Frame Forwarding Details

Note the following definitions for the purposes of the above table:

- Discard – service frame will be discarded at ingress to the NBN Co Network
- Peer – service frame will be terminated within the NBN Co Network
- Tunnel – service frame will be passed to the AVC/CVC and carried through the NBN Co Network

6.5.1.6.5 Class of Service

The traffic class model will operate transparently across an NNI.

For NNI Groups configured as Single Chassis, the failure of one or more NNI Bearers may result in the discard of traffic due to insufficient NNI Group aggregate capacity to carry the provisioned CVC capacity. In such cases, traffic is designed to be discarded according to the priority as indicated at the CVC level.

[44] Note conditions in Section 6.5.1.5.

[45] Tunnelling supported for Maintenance Domains (MD) 4, 5, 6, 7 (refer to IEEE802.1ag-2007).

6.5.1.7 NNI Group Orderable Attributes Summary

A summary of attributes that must be specified for each NNI Group order is shown in Table 41.

Component	Attributes	Attribute Description	Selectable Options
Service details	Physical Location	Physical location of NNI	POI Site
NNI Group Attributes	TPID	Ability to specify the S-TAG TPID used for service frames across the NNI	0x88A8 (default)
			0x8100
	Redundancy Mode	Physical interface type	Single Chassis (default)
			Diverse Chassis

Table 41: NNI Group Orderable Attributes

Each successful NNI Group order is intended to yield an NBN Co-supplied NNI Group identification.

6.5.2 NNI Bearer

6.5.2.1 NNI Bearer Types

The physical interface options for an NNI Bearer are as follows:

- 1000BaseLX
- 1000BaseEX
- 10GBaseLR
- 10GBaseER

The selection of interface type will be restricted depending on the interface rate of the NNI Group.

All NNI Bearers must have auto-negotiation disabled.

6.5.2.2 NNI Bearer Ordering

NNI Bearers are ordered through an NNI Group (refer to section 6.5.1.4).

A feasibility check will be required upon addition of any NNI Bearer to a NNI Group, to determine whether the number of allowable NNI Bearers within the NNI Group has been exceeded.

Each ordered NNI Bearer will be provisioned by NBN Co in an administratively “down” state, and will be activated by NBN Co in co-ordination with Customer. Billing will commence when the NNI Bearer is initially provisioned, irrespective of when it is activated.

6.5.2.3 NNI Bearer Orderable Attributes

Each NNI Bearer order must specify each of the service attributes listed in Table 42.

Component	Attributes	Attribute Description	Selectable Options
Service details	NNI Group	The NNI Group to which the NNI Bearer is intended to be associated	NNI Group identification

NNI Bearer	Type	Physical interface type	1000BaseLX
			1000BaseEX
			10GBaseLR
			10GBaseER

Table 42: NNI Bearer Service Attributes

Each successful NNI Bearer order will yield an NBN Co-supplied NNI Bearer identification, which will indicate a physical port on the NBN Co ODF to which the NNI Bearer has been cabled.

Customer must separately acquire the necessary facilities access rights to connect the NNI Bearer to Customer's backhaul transmission cables or Customer Active Equipment.

6.5.2.4 NNI Bearer Attributes

The optical interface parameters for each offered NNI Bearer are described in Table 43.

Parameter	1000BaseLX	1000BaseEX	10GBaseLR	10GBaseER
Wavelength	1310nm	1310nm	1310nm	1550nm
Fibre Type	Single Mode (Separate TX/RX Fibre)	Single Mode (Separate TX/RX Fibre)	Single Mode (Separate TX/RX Fibre)	Single Mode (Separate TX/RX Fibre)
Connector Type	SC-APC	SC-APC	SC-APC	SC-APC
Launch Power (max) (dBm)	-3	0	0.5	4
Launch Power (min) (dBm)	-11.0	-4.5	-8.2	-4.7
Receiver Power (max) (dBm)	-3	-3	0.5	-1
Receiver Power (min) (dBm)[46]	-19	-22.5	-10.3 (-14.4)	-11.3 (-15.8)

Table 43: Optical Interface Parameters (NNI Bearer)

Note that any reach indications provided by NBN Co from time to time are a guideline only and Customer must calculate its own optical path loss budgets.

Where Customer is acquiring the Facilities Access Service from NBN Co, NBN Co recommends that unless specified otherwise, any optical path loss budget calculations performed by Customer take into account a maximum, additional, loss of 1dB that may be attributed to the operation of the components of the Facilities Access Service.

[46] Stress eye sensitivity values are shown, sensitivity values shown in brackets are approx IEEE definition for informative use only.

NBN Co will use reasonable endeavours to advise of any other specific circumstances that it is aware of which may impact these optical characteristics.

7 Dependencies

NBN Co supplies the NEBS by means of:

- the NBN Co Wireless Network (using fixed wireless technology); and
- the NBN Co Fibre Network (using fibre (GPON) technology),

as further described in the Product Description for the NBN Co Ethernet Bitstream Service.

Any service supplied by NBN Co in respect of a Premises will be supplied using one of the above NBN Co Networks, which will be determined by NBN Co, based on the location of the Premises. NBN Co will determine what Product Components, Product Features and level of performance can be offered.

This section describes the restrictions on the availability and differences in performance of Product Features.

7.1 Supported Service Types

This section describes the availability of features described in section 2.

Supported Service Types	Fibre	Wireless
Unicast data services	Supported on UNI-D	
IP-based telephony services (External ATA)	Supported on UNI-D	
IP-based telephony services (Integrated ATA)	Supported on UNI-V	Not Supported
Multicast services	Supported on UNI-D	Not Supported

Table 44: Supported Service Types by NBN Co Network

7.2 Product Feature Availability

7.2.1 Service Level Options

This section describes the availability of features described in section 6.3.2.2.

Supported Service Level Option	Fibre	Wireless
Service Fault Rectification – standard	Supported	
Service Fault Rectification– Enhanced-12	Supported	Not Supported
Service Fault Rectification– Enhanced-12 (24/7)	Supported	Not Supported
Service Fault Rectification–	Supported	Not Supported

Enhanced-8		
Service Fault Rectification–Enhanced-8 (24/7)	Supported	Not Supported
Downstream Priority Assistance Service	Supported	Not Supported

Table 45: Supported Service Level Options by NBN Co Network

7.3 NNI Availability

The NNI Product Component as described in section 6.5 is available across both the NBN Co Fibre Network and NBN Co Wireless Network. There are no restrictions in the ability to deliver NNI features as a result of the type of NBN Co Network.

7.4 CVC Availability

This section describes the availability of features as described in section 6.4.

CVC Type	Fibre	Wireless
1:1 Unicast	Supported	
N:1 Unicast	Supported	Not Supported
Multicast Domain	Supported	Not Supported

Table 46: CVC Type Availability by NBN Co Network

7.5 UNI Feature Availability

7.5.1 UNI Type Availability

UNI Type	Fibre	Wireless
UNI-D	Up to 4 UNI-D per NTD	
UNI-V	Up to 2 UNI-V per NTD	Not Supported

Table 47: UNI Type Availability by NBN Co Network

7.5.2 UNI-D Mode Availability

UNI Mode	Fibre	Wireless
Default-Mapped TC-4	Supported on UNI-D	
Default-Mapped TC-1	Supported on UNI-D	Not Supported
Default-Mapped TC-2	Supported on UNI-D	Not Supported
DSCP-Mapped	Supported on UNI-D	

Priority-Tagged	Supported on UNI-D
Tagged	Supported on UNI-D

Table 48: UNI-D Mode Availability by NBN Co Network

7.6 AVC Feature Availability

7.6.1 AVC Type

This section describes the availability of features described in section 6.2.

AVC Type	Fibre	Wireless
1:1 Unicast	Supported on UNI-D	
N:1 Unicast	Supported on UNI-V	Not Supported
Multicast	Supported on UNI-D	Not Supported

Table 49: AVC Feature Availability – AVC (and Multicast AVC) Type by NBN Co Network

7.6.2 Access Loop Identification

This section describes the availability of the Access Loop Identification feature for unicast AVCs (described in section 6.2.3).

AVC Traffic Class	Fibre	Wireless
IPv4 DHCP Option 82	Supported on UNI-D Supported on UNI-V	Supported on UNI-D
IPv6 DHCP Option 18	Supported on UNI-D	
PPPoE IA Insertion	Supported on UNI-D	

Table 50: AVC Feature Availability – Access Loop Identification by NBN Co Network

7.6.3 Bandwidth Profile - Traffic Class

This section describes restrictions on the availability of a traffic class according to access technology.

AVC Traffic Class	Fibre	Wireless
TC-1	Supported on UNI-D Supported on UNI-V	Supported on UNI-D
TC-2	Supported on UNI-D	Not Supported

TC-MC[47]	Supported on UNI-D	Not Supported
TC-4	Supported on UNI-D	

Table 51: AVC Feature Availability – Traffic Class by NBN Co Network

7.6.4 Bandwidth Profile – Unicast 1:1 AVC TC-1 Speed Tiers

This section describes restrictions on the availability of TC-1 AVC speed tiers (described in section 6.3.2.7) according to access technology.

Bandwidth Profile Speed Tier (TC-1)	Fibre	Wireless
0 Mbps	Supported on UNI-D	Supported on UNI-D
0.15 Mbps	Supported on UNI-D	Supported on UNI-D
0.3 Mbps	Supported on UNI-D	Not Supported
0.5 Mbps	Supported on UNI-D	Not Supported
1Mbps	Supported on UNI-D	Not Supported
2Mbps	Supported on UNI-D	Not Supported
5Mbps	Supported on UNI-D	Not Supported

Table 52: Unicast 1:1 AVC Feature Availability – Bandwidth Profile (TC-1) by NBN Co Network

7.6.5 Bandwidth Profile – Unicast N:1 AVC TC-1 Speed Tiers

This section describes restrictions on the availability of TC-1 AVC speed tiers (described in section 6.3.2.8) according to access technology.

Bandwidth Profile Speed Tier (TC-1)	Fibre	Wireless
0.15 Mbps	Supported on UNI-V	Not Supported

Table 53: Unicast N:1 AVC Feature Availability – Bandwidth Profile (TC-1) by NBN Co Network

7.6.6 Bandwidth Profile – Unicast 1:1 AVC TC-2 Speed Tiers

This section describes restrictions on the availability of TC-2 AVC speed tiers (described in section 6.3.2.7) according to access technology.

Bandwidth Profile Speed Tier	Fibre	Wireless

[47] Delivered through a dedicated Multicast AVC only.

(TC-2)		
5 Mbps	Supported on UNI-D	Not Supported
10 Mbps	Supported on UNI-D	Not Supported
20 Mbps	Supported on UNI-D	Not Supported
30 Mbps	Supported on UNI-D	Not Supported
40 Mbps	Supported on UNI-D	Not Supported

Table 54: Unicast 1:1 AVC Feature Availability – Bandwidth Profile (TC-2) by NBN Co Network

7.6.7 Bandwidth Profile - Multicast N:1 AVC Speed Tiers

This section describes restrictions on the availability of Multicast N:1 AVC TC-MC speed tiers (described in section 6.3.2.9) according to access technology.

Bandwidth Profile Speed Tier (TC-MC)	Fibre	Wireless
5 Mbps	Supported on UNI-D	Not Supported
20 Mbps	Supported on UNI-D	Not Supported
30 Mbps	Supported on UNI-D	Not Supported
40 Mbps	Supported on UNI-D	Not Supported
50 Mbps	Supported on UNI-D	Not Supported

Table 55: Multicast AVC Feature Availability – Bandwidth Profile by NBN Co Network

7.6.8 Bandwidth Profile – Unicast 1:1 AVC TC-4 Speed Tiers

This section describes restrictions on the availability of TC-4 unicast 1:1 AVC speed tiers (described in section 6.3.2.7) according to access technology.

Bandwidth Profile Speed Tier (TC-4)*	Fibre	Wireless
0 Mbps	Supported on UNI-V[48]	Not Supported
12/1 Mbps	Supported on UNI-D	Supported on UNI-D
25/5 Mbps	Supported on UNI-D	Supported on UNI-D

[48] Upon order of the UNI-V by Customer, the UNI-V is automatically provisioned by NBN Co with TC-1 capacity.

Bandwidth Profile Speed Tier (TC-4)*	Fibre	Wireless
25/10 Mbps	Supported on UNI-D	Not Supported
50/20 Mbps	Supported on UNI-D	Not Supported
100/40 Mbps	Supported on UNI-D	Not Supported
250/100 Mbps	Supported on UNI-D	Not Supported
500/200 Mbps	Supported on UNI-D	Not Supported
1000/400 Mbps	Supported on UNI-D	Not Supported

Table 56* *To be read subject to sections 4.3.1 and 8.1.2.*: **AVC Feature Availability – Bandwidth Profile (TC-4) by NBN Co Network**

7.7 Supported Maximum Layer 2 Frame Size

The NBN Co Network has limitations around the maximum Layer 2 frame size of ingress traffic at its network boundaries.

The Layer 2 maximum frame size supported by the NBN Co Network depends on the interface (NNI or UNI-D) and access technology.

Figure 10 depicts the definition of the maximum layer 2 frame size at the NNI, highlighting the inclusion of the S-TAG and C-TAG. Note that this example shows an NNI service frame using AVC/CVC Addressing Mode A (section 3.1.5).

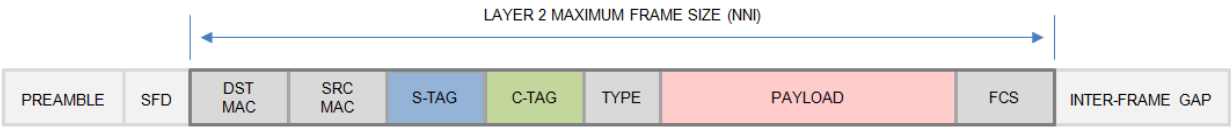

Figure 10: Definition of Maximum Layer 2 Frame Size (NNI)

Figure 11 depicts the definition of the maximum Layer 2 frame size at the UNI-D, highlighting the exclusion of the S-TAG and C-TAG. Note that this example shows a UNI-D service frame using either Default-Mapped or DSCP-Mapped modes.

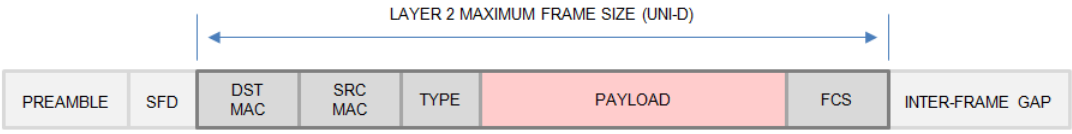

Figure 11: Definition of Maximum Layer 2 Frame Size (UNI-D – Default-Mapped/DSCP-Mapped Modes)

Figure 12 depicts the definition of the maximum Layer 2 frame size at the UNI-D, highlighting the inclusion of the VLAN tag as provided by Customer. Note that this example shows a UNI-D service frame using either Priority-Tagged or Tagged modes.

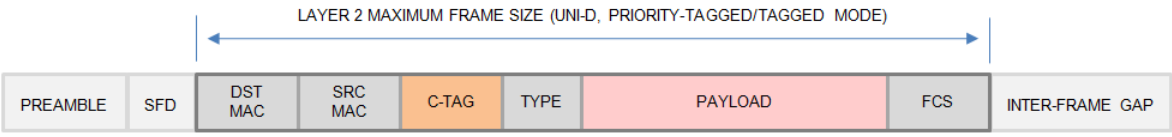

Figure 12: Definition of Maximum Layer 2 Frame Size (UNI-D, Priority-Tagged/Tagged Mode)

Table 57 describes the maximum Layer 2 frames sizes that will be accepted by the NBN Co Network, taking into consideration the different interfaces and type of NBN Co Network.

Parameter	Fibre	Wireless
Maximum Layer 2 Frame Size at NNI (NNI Addressing Mode A)[49]	2,000 Bytes	1,948 Bytes
Maximum Layer 2 Frame Size at UNI-D (Default-Mapped or DSCP-Mapped Mode)[50]	1,992 Bytes	1,940 Bytes
Maximum Layer 2 Frame Size at UNI-D (Priority-Tagged or Tagged Mode)[51]	1,996 Bytes	1,944 Bytes
Minimum Layer 2 Frame Size at UNI-D[52]	64 Bytes	

Table 57: Layer 2 Maximum Frame Size by Interface and NBN Co Network

Any ingress service frame received at the NNI that is less than 108 bytes in length (inclusive of S/C-TAG), delivered through NEBS supplied by means of the NBN Co Fibre Network will be padded to either 100 bytes prior to egress through an untagged UNI-D (i.e. operating in either Default-Mapped or DSCP-Mapped mode) or 104 bytes prior to egress through a tagged UNI-D (i.e. operating in either Priority-Tagged or Tagged mode). This padding will not change the frame size for the purpose of AVC or CVC bandwidth calculations.

In addition to discarding service frames received that are greater than the maximum allowable Layer 2 frame size, any ingress service frame received at the UNI-D that is less than 64 bytes (not including any VLAN tag applied by Customer) will also be discarded.

7.8 Network Performance

The performance of the TC-1, TC-2 and TC-4 traffic classes is specified in the Service Levels Schedule. The following information describes additional network performance information for the TC-MC traffic class.

[49] Any ingress frame that exceeds this value will be discarded.

[50] Any ingress frame that exceeds this value will be discarded.

[51] Any ingress frame that exceeds this value will be discarded.

[52] Any ingress frame less than this will be discarded.

7.8.1.1 Traffic Class Multicast (TC-MC)

TC-MC is designed for Layer 2 multimedia stream delivery.

The minimum CIR performance for TC-MC is shown in Table 58 below.[53]

Performance Parameter	Fibre	Wireless
Frame Delay	Unspecified	Not Supported
Frame Delay Variation	≤ 10msec	
Frame Loss	≤ 0.01%	

Table 58: TC-MC Performance (CIR) by NBN Co Network

These CIR performance attributes are dependent on the following operating conditions specified in Table 59, being maintained by Customer:

Parameter	Recommended Operating Condition	
	Fibre	Wireless
TC-MC Multicast Domain capacity utilisation	≤ 70%[54]	Not Supported
Maximum Frame Length	1526 Bytes[55]	

Table 59: TC-MC Recommended Operating Conditions by NBN Co Network

7.8.1.2 TC-4 Traffic Performance Characteristics

Traffic class 4 is designed for applications that can benefit from a peak capacity and can tolerate variable throughput. TC-4 offers capacity as a PIR only.

The performance of Customer Products that use TC-4 AVCs as an input will vary depending on factors both within and outside of the NBN Co Network. Customer should use suitable higher-layer intelligent flow control mechanisms to achieve optimum results for Customer Products that use TC-4 AVCs as an input. The particular access technology used to deliver the NBN Co Ethernet Bitstream Service will also have an impact on TC-4 performance.

For AVC TC-4 bandwidth profiles of 250/100 Mbps, 500/200 Mbps and 1000/400 Mbps offered over the NBN Co Fibre Network and a 10G NNI, an AVC peak burst in excess of 100 Ethernet frames may cause additional Frame Loss if Customer does not use a suitable higher-layer intelligent flow control mechanism.

---

[53] Frame Loss targets will only be met where the CBS is less than the specified limits at both the AVC and CVC level.

[54] Note that individual Media Streams must operate within their configured peak bandwidth.

[55] This is the reference condition for TC-MC traffic performance, as measured at the NNI. TC-MC service frames are accepted up to the maximum frame size as described in section 7.7.

8 Deployment Guidelines

8.1 Fibre Network Termination Device (F-NTD)

NEBS supplied by means of the NBN Co Fibre Network is delivered to a Premises using a physical NTD (**Fibre Network Termination Device** or **F-NTD**).

The F-NTD is deployed as a single unit that is intended for residential deployments, primarily for single-dwelling premises[56] for the supply of the NEBS by means of the NBN Co Fibre Network. However, it may be used for other types of deployment subject to NBN Co's confirmation of suitability.

The internal and external F-NTD variants are functionally identical, in the number of ports and services that each can deliver.

8.1.1 Physical Interfaces

The F-NTD has the following UNI ports:

- Four electrical 10/100/1000BASE-T Ethernet UNI-D ports
- Two UNI-V ports

Figure 13 shows the arrangement of UNI-D and UNI-V ports on the internal F-NTD.

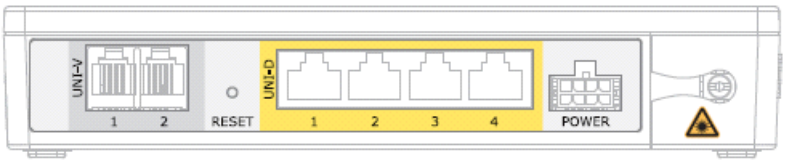

Figure 13: Internal F-NTD

8.1.2 Throughput Limit

The F-NTD is capable of servicing a maximum aggregate traffic throughput of 1Gbps downstream and 1Gbps upstream in total across all UNI ports.

Customer must ensure End Users are aware before placing an order for a Customer Product or a Downstream Product that if the PIR bandwidth profiles for all ordered products supplied to the F-NTD across all UNI ports by Customer and all Other NBN Co Customers exceeds the F-NTD aggregate throughput limit, the ordered products supplied to that F-NTD may not be able to achieve maximum peak data throughput simultaneously.

8.1.3 Power Supply

The F-NTD is supplied with a Power Supply Unit that must be connected to an Australian standard power outlet, supplied with 230V 50Hz AC in accordance with AS60038-2000. The Power Supply Unit may be installed indoors in a Premises or outdoors in a utilities enclosure attached to the external wall of the

[56] NTD is also applicable for multi-dwelling units where fibre access is deployed to each premises.

Premises. The Battery Backup Service will only be available where the Power Supply with Battery Backup is installed indoors in a Premises. Where the Power Supply Unit is installed in an external utilities enclosure, the Battery Backup Service will not be available.

NBN Co recommends connecting the Power Supply Unit directly to a GPO if possible, and in any case recommends installing the F-NTD within a distance of a GPO that will allow a direct connection to the GPO in case it is required for fault rectification activities.

The F-NTD must be left powered on.

Where a Power Supply with Battery Backup is installed indoors in respect of the F-NTD and a compatible battery is installed, the battery backup function will provide temporary continuity of F-NTD operation during a mains power outage. The run-time of the battery during a mains power outage is directly related to, among other things:

- service configuration and usage patterns (including call times and data use while running on battery power)
- battery age
- battery average temperature over battery lifetime
- time (hours) since last discharge of the battery
- number of discharges of the battery from new
- temperature during discharge of the battery

Indicative run-time figures for the First Battery, based on typical usage scenarios, are set out in Table 60. The approximate run-time is inclusive of the emergency battery capacity, which requires an End User to press the "Battery Emergency Use" button on the Power Supply with Battery Backup to access the last 30% - 40% of battery capacity.

Usage Scenario	Approximate run-time at room temperature for a new battery	Approximate run-time at 0 degrees Celsius for a battery at the end of its operational life
Low usage, single customer Only a single UNI-V, or a single UNI-D connected and in service with 5 minutes of telephone calls and a few hundred megabytes of data transfer.	11 hours	6 hours
Typical usage, single customer One UNI-V and one UNI-D connected and in service at the same time with 1½ hours of telephone calls and a few hundred megabytes of data transfer.	10 hours	5½ hours
High usage, single customer One UNI-V and one UNI-D connected and in service at the same time.	9 hours	5 hours
Maximum usage, multiple customers Two UNI-V and four UNI-D connected and in	6 hours	3½ hours

service at the same time.		

Table 60: Approximated battery runtimes for First Battery

The Power Supply with Battery Backup periodically tests the presence and health of the attached battery. When the battery is missing or needs replacement, the Power Supply with Battery Backup will issue both visual and audio alarms.

Where Customer has specified the Battery Backup Service in respect of an Ordered Product supplied to a UNI on the affected F-NTD, NBN Co will provide a notification of the alarm to Customer as set out in the NBN Co Operations Manual as part of the Battery Backup Service.

A replacement battery for attachment to the Power Supply with Battery Backup must conform to the following specifications:

- Type: 12V 7.0-7.2Ah 6 Cell VRLA Sealed Lead Acid Battery
- Dimensions: 150mm (W) x 94mm (H) x 64mm (D)
- Terminals: Quick Disconnect F2 6.35mm (W) x 0.81mm (T) terminals

The terminals must be located 8mm from the battery sides and 12-24 mm from the battery end, and the positive terminal must be positioned on the side depicted in Figure 14.

Customer must ensure that any replacement battery attached to the Power Supply with Battery Backup complies with the specifications in this section 8.1.3.

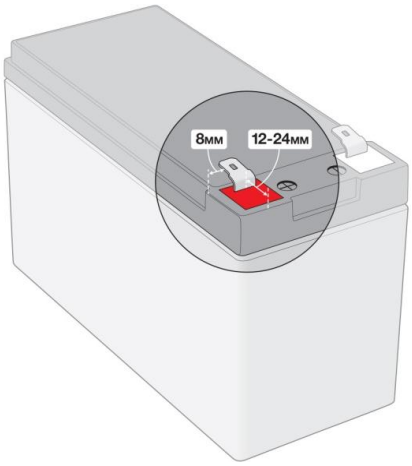

Figure 14: Battery terminal placement

The terminals must be located 8mm from the battery sides and 12-24 mm from the battery end, and the positive terminal must be positioned on the side depicted in Figure 14.

Customer must ensure that any replacement battery attached to the Power Supply with Battery Backup complies with the specifications in this section 8.1.3.

8.2 Wireless Network Termination Device (W-NTD)

The NEBS supplied by means of the NBN Co Wireless Network is delivered to a Premises using a physical NTD (**Wireless Network Termination Device** or **W-NTD**).

The W-NTD is intended for residential deployments, primarily for single-dwelling premises. However, it may be used for other types of deployment subject to NBN Co's confirmation of suitability.

The W-NTD consists of an indoor and outdoor unit, as depicted in Figure 15 (Indoor Unit) and Figure 16 (Outdoor Unit). Both units must be deployed at a Premises for the supply of the NEBS by means of the NBN Co Wireless Network. The W-NTD Outdoor Unit is connected to the W-NTD Indoor Unit via an Ethernet cable providing power supply over Ethernet.

Figure 15: W-NTD Indoor Unit

Figure 16: W-NTD Outdoor Unit

8.2.1 Physical Interfaces

The W-NTD has the following UNI ports:

- Four electrical 10/100/1000BASE-T Ethernet UNI-D ports

8.2.2 Power Supply

The W-NTD is supplied with an indoor Power Supply Unit that must be connected to an Australian standard power outlet, supplied with 230V 50Hz AC in accordance with AS60038-2000.

NBN Co recommends connecting the Power Supply Unit directly to a GPO if possible, and in any case recommends installing the W-NTD within a distance of a GPO that will allow a direct connection to the GPO in case it is required for fault rectification activities.

The W-NTD must be left powered on.